www.armyfieldcatering.com • www.oztiryakiler.com.tr • export@oztiryakiler.com.tr

Export Headquarters: Cumhuriyet Mah. Hadımköy Yolu Cad. No: 8 P.K 34500 Büyükçekmece / İstanbul - Türkiye
Tel: +90 (212) 886 78 10/11 **Fax:** +90 (212) 886 62 36

BASKI: 04.2019

DEFENSE INDUSTRY LOGISTIC SUPPORT SYSTEM

ozti

“ An Army Marches on its Stomach ”

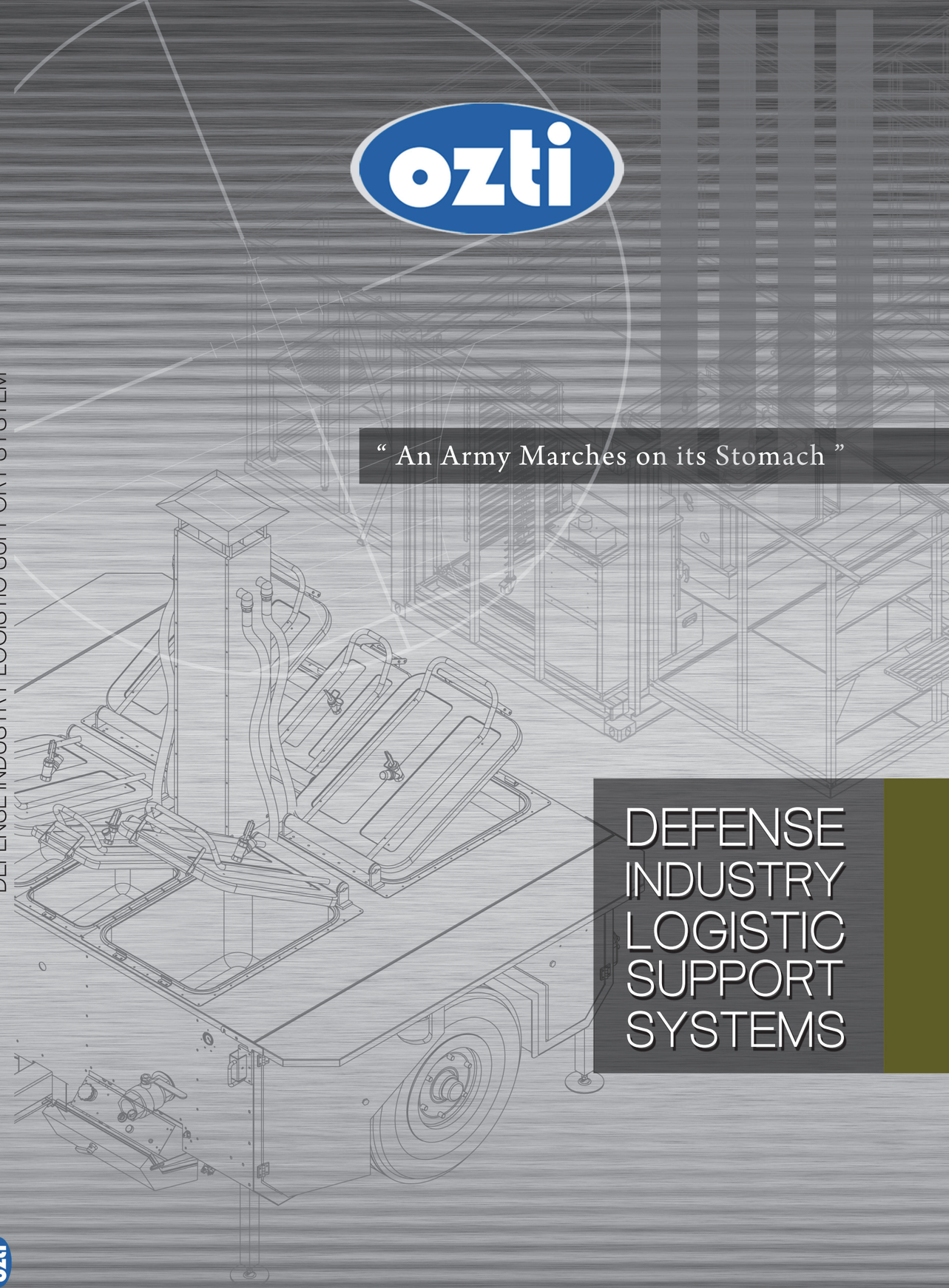

DEFENSE INDUSTRY LOGISTIC SUPPORT SYSTEMS



WHEREVER YOU ARE, WHENEVER YOU NEED...

Founded in 1958, Öztiryakiler (Ozti) is a leading Turkish manufacturer of Commercial Catering Equipment and Defense Industry Logistic Support Systems.

The company manufactures and exports more than 4500 different kind of high quality products and also offers complete turnkey projects with over 60 years of experience .

Its 150,000 m2 modern plants regroup all the production steps with a staff of nearly 1300 workers.

Öztiryakiler is among the most successful Turkish exporter companies and has worldwide references in more than 100 countries.

Being the main supplier of the Turkish Military Forces, Öztiryakiler has developed highly innovative product line consisting of Field Catering Solutions and various Field Utilities for militaries deployed around the world.

These products are designed for rapid deployment and they are mainly based on two different supports: trailers and containers.

Öztiryakiler can provide customized state-of-the-art solutions to meet all military requirements, as well as the needs of civilian users such as humanitarian aid organizations.

With over 1000 units serving in many countries Öztiryakiler military products have proven themselves on their capability and high quality.

Some of our references: Georgia, US Army TACOM LGMC , Azerbaijan, Malaysia, Kingdom of Saudi Arabia, Iraq Ministry of Defense, Royal Thai Marine corps, Paraguay, Russia, UAE, Italy, Mauritania. Zimbabwe...

- Containerized Bakery
- **Mobile Laundry**
- Sanitary Container
- Sanitary Trailer

- **Field Kitchen**
- Containerized Kitchen
- **Expandable Container Kitchen**
- **Refrigerated Container**
- Water Purfication System

CERTIFICATES

ÖZTİRYAKİLER MADENİ EŞYYA SAN. VE TİC. A.Ş.

TR-KY-1161-03/KG-99/09-R

TSE EN ISO 9001:2008

SCOPE OF THE CERTIFICATE

DESIGN, PRODUCTION, SALES AND AFTER SALES SERVICE OF, EQUIPMENTS FOR PREPARATION, COOKING, CARRIAGE AND SERVICES USED IN HOTELS, RESTAURANTS, FAST FOOD RESTAURANTS, BARS, PATISSERIES, CAFETERIAS, HOSPITALS, DINING HALLS, DOMESTIC AND MILITARY KITCHENS, FIELD AND MARINE KITCHENS, ELECTRICAL AND GAS BURNING KITCHEN APPLIANCES, COOLING UNITS AND WORKING BENCHES.

ÖZTİRYAKİLER MADENİ EŞYYA SAN. VE TİC. A.Ş.

TR-ÇY-907/17

TSE EN ISO 14001:2015

SCOPE OF THE CERTIFICATE

- DESIGN, PRODUCTION, SALES AND AFTER SALES SERVICE OF KITCHEN EQUIPMENTS AND DEVICES USED AND HOTELS, RESTAURANTS, CAFES, FAST FOOD LOCATIONS, BARS, PATISSERIES, HOSPITALS FACTORIES AND CATERING BUSINESSES
- MOBILE FIELD KITCHENS
- SHIP KITCHEN EQUIPMENTS
- MOBILE WATER PURIFICATION SYSTEMS
- MOBILE SANITARY SYSTEMS
- MILITARY KITCHEN AND SERVICE UNITS
- STANDART TYPE CONTAINERS
- CONTAINERIZED KITCHEN UNITS, LAUNDRY UNITS, BAKERY UNITS, SUPPORT UNITS FOR VARIOUS PURPOSES, COOLING UNITS, GAS-BURNING, ELECTRICAL, PRESSURED AND NEUTRAL COOKING; STORAGE AND TRANSPORTATION DEVICE UNITS
- WORKBENCHES
- CABINETS
- SERVICE DISPLAY UNITS AND HOODS

ISO 13485
EN ISO 13485:2012
TIBBİ CİHAZLAR



Bureau International des Containers et du Transport Intermodal (B.I.C.)

OZTIRYAKILER MADENI ESYA SAN.TIC.A.S.
cumhuriyet mah. hadımköy yolu cad no7-8
buyukçekmece
34500 istanbul
Turkey

CERTIFICATE OF REGISTRATION OF CONTAINER CODE

In accordance with ISO Standard 6346, Customs Conventions and BIC Registration terms,
The Bureau International des Containers hereby certifies that the BIC Code:

AYTU

has been duly registered by the BIC and assigned to :

OZTIRYAKILER MADENI ESYA SAN.TIC.A.S.

Certificate No. AYTU-1819

2019

The registered code shall apply only for containers owned/operated by the company named above and remains valid for through **15 March 2020**. In January 2020 a renewal notice and associated invoice shall be issued. Please ensure prompt return and payment to ensure continued validity of this code.
Should the company name, address or ownership status change, please notify the BIC at the postal or email address or shown below.
Freight container prefix registration with the BIC is required by ISO standard 6346 and by the National Customs Administrations according to both Customs Convention on Containers (CCC-1972, revised 2008) and Istanbul Convention (1990, revised 2010). This grants the benefits of free circulation and temporary admission for containers displaying an owner's code registered with the BIC.

Important notice: Consequences of the official registration of a BIC code Extract of the Registration Procedures, (for more information please consult the official annual CONTAINERS BIC-Code Register or the website www.bic-code.org)
Each container marked with a code "- - U" is officially and worldwide known to be owned - or operated (see 8.1.2) - by the code holder as recorded in BIC Register, with all the related responsibility (legal, commercial, damage, insurance, etc...) of such ownership.
After initial registration, this international code protection is subject to the payment of a yearly renewal fee (as per tariff published each year in the CONTAINERS BIC-Code Register).
Non-payment of the renewal fee will result in the **cancellation of this code protection within a period of 6 months,** confirmed by a registered letter, and with information to the controlling authorities worldwide. In case of transfer of ownership of such container(s), responsibility shall remain with above mentioned code holder until the time when :
- the code marking is removed from each and every container.
or - the code marking is changed for another - duly registered with BIC - held by the new owner (see 8.1.7)
or - the code marking remains unchanged but its ownership has been duly transferred to another entity (see 8.1.3 d).

Jan 26, 2019

Certificate issued by

Tiana Randriamose
Coding Department
tra@bic-code.org

41, rue Réaumur – FR 75003 Paris
www.bic-code.org
Tél. : +33 (0)1 47 66 03 90 – Fax : +33 (0)1 47 66 08 91
e-mail : bic@bic-code.org

SIRET : 758 330 703 00045 – APE 9412Z
(ASSOCIATION SANS BUT LUCRATIF FONDEE EN 1933 SOUS LES AUSPICES DE LA CHAMBRE DE COMMERCE INTERNATIONALE)
(ESTABLISHED IN 1933 UNDER THE AUSPICES OF THE INTERNATIONAL CHAMBER OF COMMERCE AS NON-PROFIT ASSOCIATION)



TÜRK LOYDU

CSC
CONTAINER PRODUCTION CERTIFICATE
KONTEYNER ÜRETİM SERTİFİKASI

TL No : 10163
Certificate No/*Sertifika No* : 77-190208105412-001
Date of Issue/*Sertifika Tarihi* : 08.02.2019

Manufacturer and Address : ÖZTİRYAKİLER MADENİ EŞYA SANAYİ TİC. A.Ş
İmalatçı ve Adresi

Container Type : Cargo Container - ISO 1 CC – 22R1
Konteyner Tipi

Serial No : AYTU221006-0 , AYTU221007-6 , AYTU221008-1, AYTU221009-7 , AYTU221010-0, AYTU221011-6, AYTU221012-1 , AYTU221013-7, AYTU221014-2, AYTU221015-8
Seri No

Quantity : 10
Adet

CSC Type Approval Certificate No : 77-190108103242-001
CSC Tip Onay Belge No

Inspection Date : 07.02.2019
Muayene Tarihi

Container Characteristics/ Konteyner Bilgileri
Maximum Gross Weight/ *Izin Verilen Brüt Ağırlık* : **10,886 kg**
Tare Weight/ *Dara Ağırlığı* : **2,770 kg**
Net Cubik Capacity/ *Net Kübik Kapasite* : **31 m³**
Allowable Stacking Weight/ *Müsaade Edilen İstif Ağırlığı* : **213,360 kg**
Racking Test Load/ *Emine Dayanım Test Yükü* : **15,295 kg (150,000 N)**

This is to certify that the container(s) detailed above meets the requirements of CSC (International Convention for Safe Containers)/ *Bu belge yukarıda belirtilen konteyner(ler)in CSC (International Convention for Safe Containers) gereklerini karşıladığını göstermektedir.*

B.Umut BAŞSU
Industrial Certification Division Manager
Endüstriyel Bölümü Müdürü

Birol MORGÜL
Technical Manager
Teknik Yönetici

This certificate is subject to terms and conditions overleaf. Any significant change in design or construction of the product may render this Certificate invalid./ *Bu belge üzerinde yazılı olan şartlara tabidir. Ürünün tasarım ve yapısındaki herhangi bir önemli değişiklik bu belgeyi geçersiz kılar.*

Form No: EMO.TSA.09.F.01.2019

TÜRK LOYDU – Evliya Çelebi Mh. Tersaneler Cd. No:26/1 – 34944 Tuzla/İSTANBUL – Tel: 0216 581 37 00 – E-posta: endustri@turkloydu.org
1/1

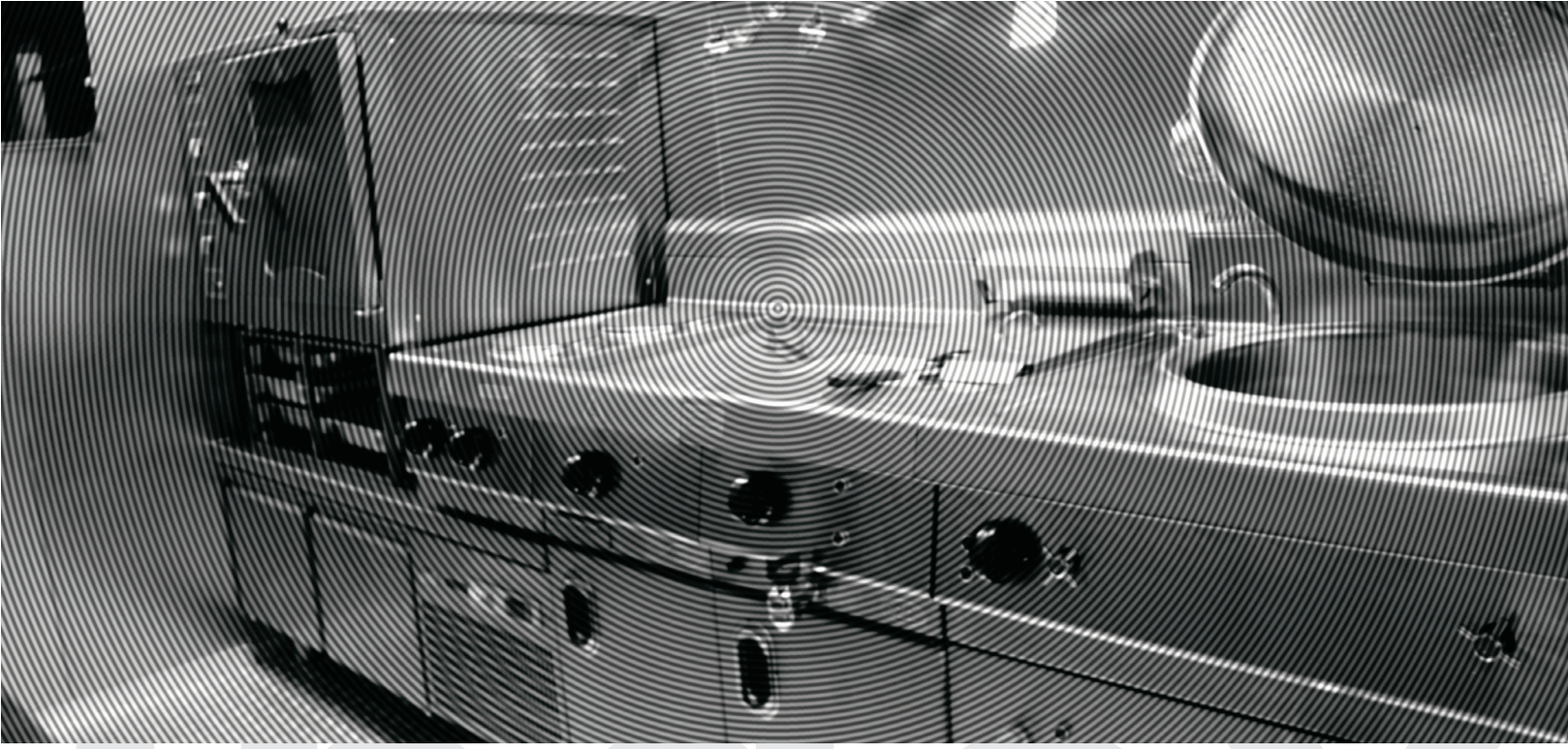

index

Field Kitchen	5
OFK 01	11
OFK 02	15
OFK 03	19
OFK 04	23
OFK 05	27
OFK 06 V1	31
OFK 06 V2	35
Ozti Portable Cooking Module	39
Bistro (Small Restaurant) in Train	41
ISO Containers	45
Containerized Kitchen	49
20' Container Kitchen	50
40' Container Kitchen	54
Expandable Diesel Container Kitchen	56
Expandable Electrical Container Kitchen	59
Containerized Dishwashing	61
Refrigerated Container	64
Water Purfication Systems	69
Containerized Bakeries	73
Mobile Bakery Trailer	87
Laundries	91
Laundry Trailer	92
Containerized Laundry	94
Ablution Systems	97
Mortuary Container	106
Ozti-Weatherhaven Container Systems	109
Our Respectable History	**116**



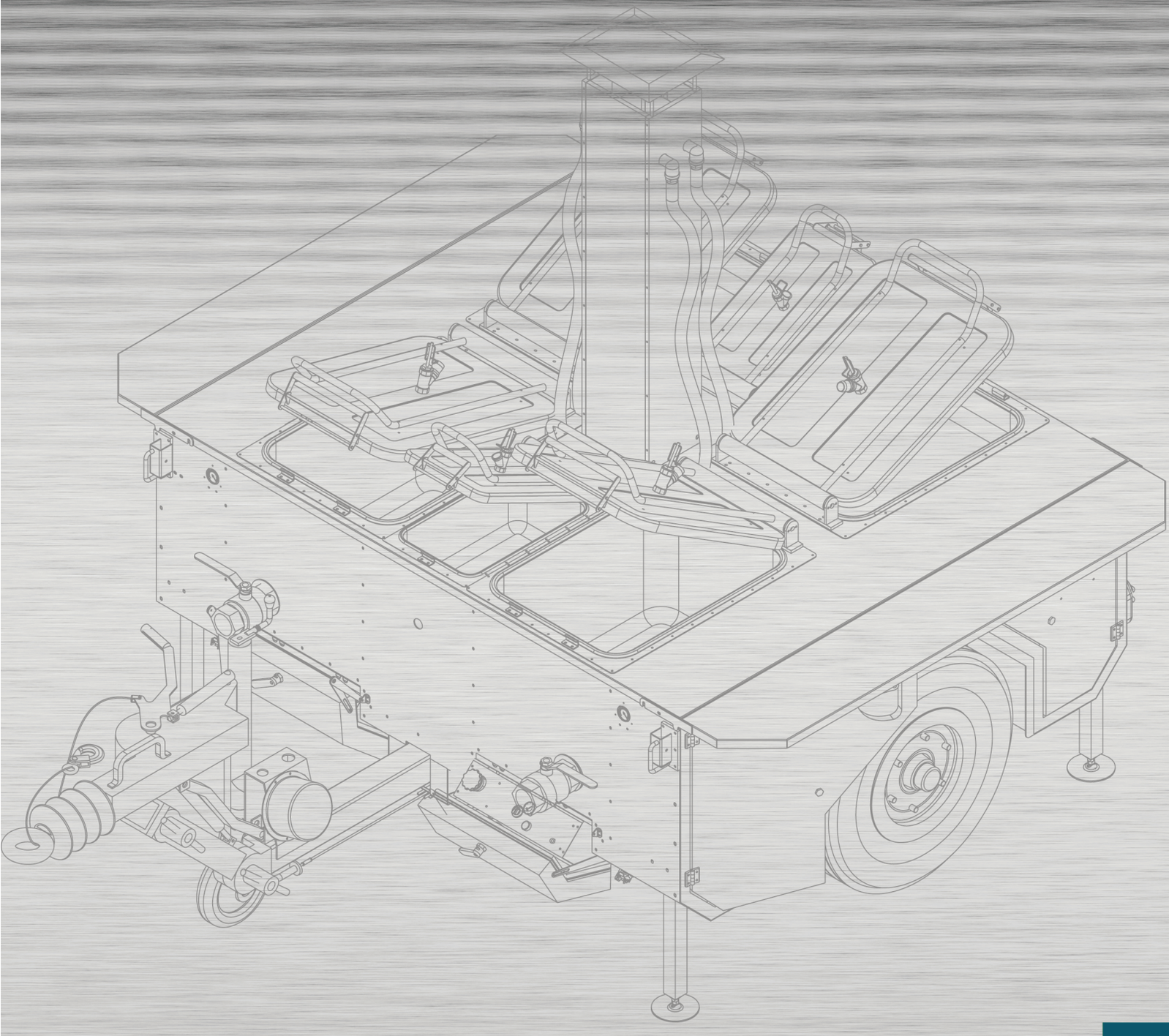

Field Kitchen



Ozti Field Kitchen is an highly advanced catering system designed for mobile applications with the armed forces, civil defence and disaster control organizations as well as charity aid and event organizations.
Trailer field kitchen is ready for use almost instantly. Cooking can begin as soon as the kitchen is set in a proper place and position. Each cooking unit operates independently so different meals can be prepared at the same time.

Ozti Field Kitchen can come up with special solutions that allows to cook different world cuisine recipes.







Color Options:



transportation by land, sea or air:



Improved cross - country capability



Integrated weather protection

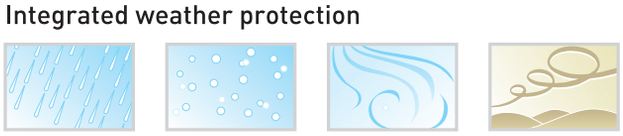

• Boiling, frying and baking pans are designed in accordance with the GN container system EN 631-1.
• Boiling pans are made of high-grade stainless steel. All lids of pressure boilling pan, frying pan, hot water unit and oven are stainless steel.
• A wide range of meals. Soups, casseroles or rice can be prepared in the double-walled boiling kettle module. It is also suitable for steam cooking.
• All modules can be operated at the same time or independently.
• Boiling pan provides uniform heat distribution through all food to the same degree and guarentees excellent results even at low temperatures or with reduced quantity of food.
• The food can be left in the double-walled pans if location change is needed. Lids with silicone seal prevent spilling of the food and heat loss.

		OFK 01	OFK 02	OFK 03	OFK 04	OFK 05	OFK 06 V1	OFK 06 V2	OFK 06 V3
COOKING EQUIPMENTS	PRESSSURE BOILING PAN 190 LT	2	-	-	2	1	-	-	2
	PRESSSURE BOILING PAN 150 LT	-	2	2	-	-	-	-	-
	PRESSSURE BOILING PAN 110 LT	-	-	-	-	-	2	3	-
	PRESSSURE BOILING PAN FOR COUSCOUS	-	-	-	-	1	-	-	-
	FRYING PAN 50 LT	2	2	2	1	2	1	1	2
	FRYING PAN 100 LT	-	-	-	1	-	-	-	-
	OVEN 105 (3 x 2/1 TRAY)	2	-	-	1	2	-	-	-
	OVEN 105 (2 x 2/1 TRAY)	-	2	-	-	-	-	-	-
	CONVECTION OVEN	-	-	-	-	-	1	-	2
	HOT WATER UNIT	2	2	-	2	2	-	-	-
	HOT PLATE (GRILL PLATE)	-	-	-	-	-	1	1	2
BURNERS	DIESEL BURNER 25 KW	-	4	-	4	4	-	-	-
	DIESEL BURNER 18 KW	-	-	-	-	-	4	4	4
	LPG BURNER	-	-	4	-	-	-	-	-
	MULTIBURNER	O	O	-	O	O	-	-	-
	SOLID FUEL BURNER	4	4	4	4	4	-	-	-
ADD-ONS	AIR COMPRESSOR	S	S	-	S	S	-	-	-
	GEN SET	S	S	-	S	S	O	O	O
	LPG TUBE	-	-	2	-	-	-	-	-
	WATER PURIFICATION	S	S	-	S	S	-	-	-
	HOIST	-	-	-	S	-	-	-	-
	WORKING TABLE/BENCH	S	S	S	S	S	S	S	S
	WAEATHER PROTECTION (TARPAULIN)	O	O	O	O	O	O	O	O
	COTTON FLEECE	O	O	O	O	O	O	O	O
	WORKING PLATFORM	O	-	-	O	O	-	-	-
	STRAINER FOR PRESSURE BOILING PAN	O	O	O	S	O	O	O	O
	COUSCOUS STRAINER	-	-	-	-	S	-	-	-





COOKING METHODS

		STEWING	PRESSURE COOKER	BAKING	GRILLING	FRYING	ROASTING	BOILING	STEAMING
COOKING EQUIPMENTS	PRESSURE BOILLING PAN	●	●					●	●
	FRYING PAN	●			●	●	●	●	
	FRYER	●			●	●	●	●	●
	OVEN	●		●					
	HOT WATER UNIT							●	
	COUSCOUS COOKER (STEAM COOKER)	●	●						●

Axle



Field kitchen is mounted on a single axle trailer. The rubber tortion axle supported with two shock absorbers provides a comfortable drive. The trailer is equiped with an overrun brake unit to prevent any crash when the truck brakes down. Field kitchen can be towed with any military or civil vehicle easily by the height adjustable coupling ring. In parking area, it is very easy to move on the jockey wheel.

The drawbar of the Field Kitchen is equipped with a hand brake damper having a 3000 kg's load capacity. Trailer Field Kitchen can easily be towed by civilian and military vehicles, equipped with a drawbar and lunette, which is height adjustable and complies with NATO standards.
If the kitchen and the towing vehicle gets disconnected by accident, trailer brakes will be activated by the cable of the safety break, tied to the towing vehicle. Housing is complemented by a landing leg wheel enabling easy parking.

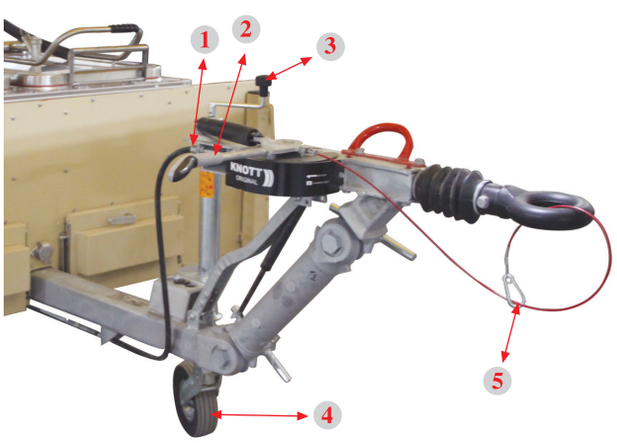

1- Electrical connection socket
2- Hand brake
3- Jockey wheel adjustment arm
4- Jockey wheel
5- Safety brake arm



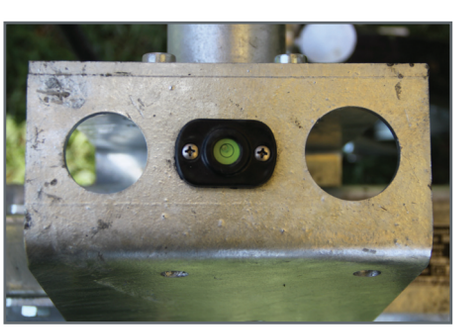



Standard accessories 69 pieces



CODE	PRODUCT	PCS
0270.03231.11	FOOD CARRYING CONTAINER DOUBLE SKIN (32 x31 cm)	1
0311.11150.10	GASTRONORM CONTAINER-GN 1/1-150	4
0311.11150.21	PERFORATED GASTRONORM -GNP 1/1-150	2
0311.11200.10	GASTRONORM CONTAINER GN 1/1-200	2
0311.21065.10	GASTRONORM CONTAINER GN 2/1-65	6
0311.21150.10	GASTRONORM CONTAINER GN 2/1-150	2
0311.21200.10	GASTRONORM CONTAINER GN 2/1-200	2
8224.OT600.01	TERMO TRANS OT600-GREEN	1
8340.00005.01	TINNED MESH SKIMMER THICK WIRED :5 mm S/S	5
8467.02007.00	GRILL TONG	5
8468.00005.01	HEAVY DUTY LADLE: 5 S/S	5
8481.02005.01	ONE PIECE SERVING SPOON	5
8481.02005.02	ONE PIECE PERFORATED SPOON	5
8653.00100.01	WOOD MIXING TOOL 100 cm	1
8481.02005.04	ONE PIECE SERVING SPATULA	5
0312.00011.21	GN 1/1 LID WITH SILICON	4
0312.00011.11	GN 1/1 LID S/S	4
0312.00021.11	GN 2/1 LID S/S	10
	TOTAL 69	

Thermotrans OT 600

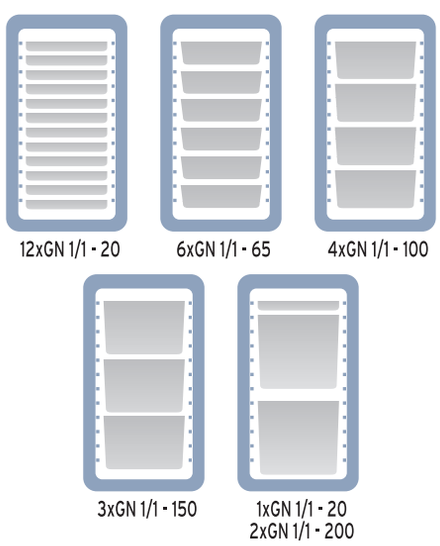

Thermotrans insulated food carrying boxes are the most compatible way for transporting temperature sensetive hot or cold food for long distance or where the food will spend sometime outside away from a power source or heating equipment to preheat before service. Silicon lid usage for GN containers stops possible liquid leakage and ideal solution for meeting hygiene standards, even with long duration transports. Thermotrans units are easy to carry, durable and lower cost for subsititute of electrical mobile heating systems and other equipment needs for preheating. Multitude sizes of GN container can be loaded.

Frontlander with 12 shelves, 39 mm shelf distance, 270°C swing door with hinge lock. Gastronorm containers between 2,5 and 28 liter capacity can be placed into the thermotrans and the proper usage of gastronorms containers with silicon lid prevents spilling of the foods. Dishwasher safe, odourless, nontoxic.

The thermotrans are stackable and dishwasher safe. They are Heat & Cold resistant for +100 to -40 ° C.

THERMOTRANS

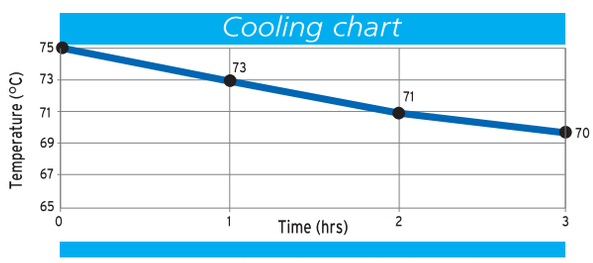

Temperature loss at hot meals

For more information and other options please check our website or product catalogues

2 Tons Water Tank



Collapsible fabric tanks also known as pillow bladders both for temporary and long-term liquid storage. Is made out of a special PVC coated polyester fabric. The raw material used inside the tank blocks UV rays which makes it resistant to bacteria, mould and moss growth.

Liter	Empty W	Empty L	Full W	Full L	Full H	Inlet Oulet	Float Valve System
2000 lt	211 mm	274 mm	182 mm	244 mm	67 mm	1 1/2"	1/2"

Delivery package

- Installation Set
  1 pcs. of UPVC valve - 2 pcs. of Hose clips
  1 pcs. of UPVC tap - 1 pcs. of UPVC hose adaptor 1 Teflon Band
- Carry Bag
- Ground Cover
- Repair Kit
- Sand Paper Glue 4 pcs. Patches

Awning



All trailer kitchens are supplied with instant weather protection tent. Weather protection tent is semi-automatic and easy to operate. The swing-up tent gives you ability to cook under waterproof and in more hygenic environment. It also gives protection from rain sun and snow.



The Oil absorbing fleece that we provide optional can be attached onto awning, the fleece which absorbs both moisture and oil prevents foods from water or oil drops.

Optional, removable weatherproof awning is two-part, all-round, four side section and can completely cover trailer kitchen. Removable awning is required for bad weather conditions (snowfall, sand storm, heavy rain, storm...) Awning can easily attach to instant tent from top and fixed to the ground from bottom.



Complete meal for 400 persons is ready in 2 hours!
In emergency simple meal for 800 persons is ready in 2 hours!



Technical Data:

Model No:	OFK 01

Dimensions and Weight:

Net Weight:	approx.1950 kg
Overall length:	3840 mm
Overall width:	2240 mm
Overall height:	approx.2650 mm
Height of work surface, empty:	1150 mm
Height of work surface, loaded:	1100 mm
Length of work surface:	1910 mm
Ground clearance:	300 mm

Chassis with frame:

Over running brake with automatic back-up lock	
Towbar height, adjustable	550-1050 mm
Retractable support wheel	1
Handbrake with breakaway cable	1
Asbestos-free brake linings	2
Tyres, 235/75 R17.5	2+1
Stowage compartment	4
Fire extinguisher box	1
NATO towbar eye, standard fitment	1
DIN towbar eye	on request

CE E7

Cooking Unit	Meal Specialty	Cooking Time	Cooking Capacity	Portion Size
Boiling Pan	Soup	60 min	400 person	200 - 250 gr
	Rice	45 min	400 person	300 gr
	Hotplate	It depends on the specialty of food		
Frying Pan	Fried Vegetable	30 min	75 person	70 - 80 gr
	Fried Meat	30-60 min	75 person	200 gr
	Fried Chicken	30 min	75 person	200 - 250 gr
Oven	Meat	120 min	50 person	200 gr
	Chicken	120 min	50 person	200 gr
	Vegetable	120 min	50 person	200 gr
	Bread	120 min	150 pieces	150 gr
Hot Water	Tea	60 min	100 person	1 Cup
	Water	60 min	100 person	1 Cup

COOKING EQUIPMENT	
PRESSURE BOILING PAN190 LT	2
FRYING PAN 50 LT	2
OVEN (3 x 2/1 GN) 105 LT	2
HOT WATER UNIT 34 LT	2

BURNERS	
DIESEL BURNER	4
SOLID FUEL BURNER	4

ADD-ONS	
AIR COMPRESSOR	S
GENERATOR	S
WATER TREATMENT	S
WORKING TABLE / BENCH	S
WEATHER PROTECTION (PVC TARPAULIN)	O
COTTON FAT-ABSORBING FLEECE	O
PLATFORM	O
STEAM COOKER STRAINER (PERFORAD 2/1 GN)	S

S: Standard O: Optional

Standard Features

Water Treatment



Water treatment unit designed to provide clean water from raw water sources for general purposes like cleaning the equipments or the kitchen.
With the capacity of 1500 l/h, the system removes the dirt and disinfects the bacteria in the raw water.

Generator



Field Kitchens with liquid fuel constantly need pressurized air. In order to meet the pressurized air requirement, a generator is supplied with mobile kitchen.

Engine Type	4-Stroke Diesel
Cooling System	Air Cooled
Oil Storage Capacity	1.75 lt.
Alternator Type	Monophase
Continuous Voltage	230 V
Continuous Frequency	50 Hz.
Continuous Current	30.4 AMP.
Continuous Output	7 kVA
Max. Output	7.5 kVA
Fuel Consumption	2.32-2.4 l / h
Ext. Dimension(L x W x H)	865 x 598 x 650 mm.
Total Weight	120-145 kg.
Fuel Tank Capacity	16 lt.

Water Hose With Spray and Fire Extinguisher



In case of fire it provides self protection.

Air Compressor

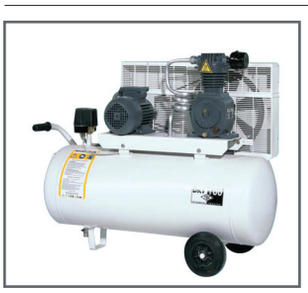

Model	DKC 150
Liter	125
Bar	8
Lt./min.	327
1/min.	800
kW/Hp	1.5 / 2,0
Dimension (mm)	1350 x 420 x 850
Weight	110 kg.

Field Kitchens with liquid fuel constantly need pressurized air. In order to meet the pressurized air requirement, a compressor is supplied with mobile kitchen.

Boiling Pan

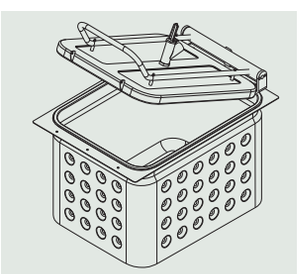

190 lt. pressure boiling pan (Gastronorm Size) provide hygienic and biological cooking advantage , as well as fuel saving up to % 70 as a result of shorter cooking time.

Volume	190 lt.
Working temperature (inside of the pressure boiling pan)	110 °C
Max. working pressure in the outer jacket	0,5 bar

Frying Pan

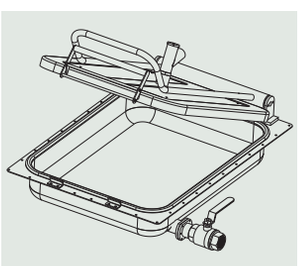

The triple layer material at the bottom of frying pan provides heat distribution even across entire cooking surface. Frying pans are made of AISI 304 CrNi stainless steel.

Volume capacity	50 lt.
Working pressure	0,2 bar

Hot Water

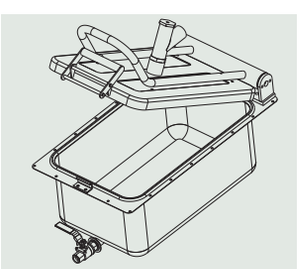

Hot water is always neccesary on field for cleaning vegetables, cleaning the equipments, cooking and for making hot beverages like coffee and tea. Hot water units are made of AISI 304 CrNi stainless steel.

Volume capacity	34 lt.
Working pressure	0,2 bar

Oven

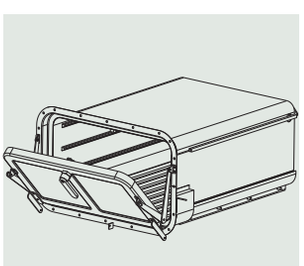

Oven (105 lt.) is located at the rear of the unit. It has been designed to place 3 GN 2/1 - 65 mm tray.

Volume capacity	105 lt.

Liquid Fuel Burner

Ozti Liquid Fuel Burner is designed for burning diesel, kerosene and gas oil. It's high efficiency burning unit intended for quick operation.

The fuel pressurized inside the fuel tank burns efficiently with heat energy which can be adjusted between 15 kW/hour and 25 kW/hour.

Following sources and equipments are needed for operation of Liquid Fuel Burner.

1. Power Supply: 24 ± 5 V DC energy is required for operation of the burner.
2. Compressed Air Supply: 6 bar compressed air is required for operation of the burner.

Dry Weight	27 kg
Estimate Gross Weight	35 kg
External Dimensions	820 x 464 x 235 mm
Air Tank Volume	6,8 lt.
Air Tank Operating Pressure	2,5 – 6,0 bar
Check Valve Bleeding Pressure	9 bar
Fuel Tank Volume	8,0 lt.
Fuel Consumption	Max.: 2,5 lt. / hr. 25 kW Min.: 1,5 lt. / hr. 15 kW

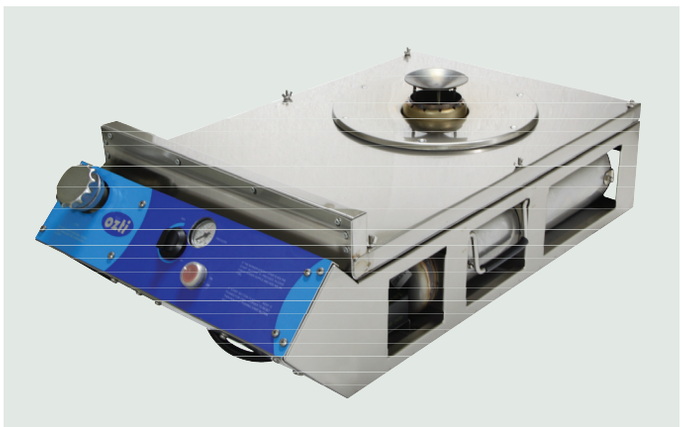

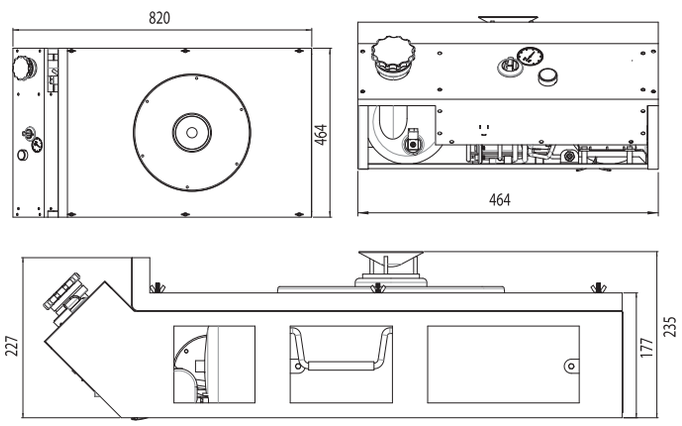

Solid Fuel Burner

In emergency situations solid fuel burner operating with wood, coal, peat etc. can be used instead of liquid fuel burner or LPG burner. Handles for easy carrying and loading. Two side sliding front covers for enabling or stoping air-flow into the fire.
Solid fuel burner is made of Stainless Steel.

DIMENSIONS:
763 x 430 x 200 mm



Placement of Burner

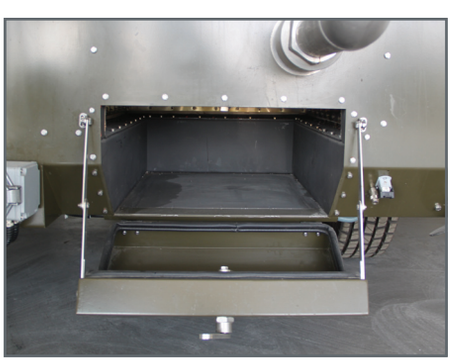



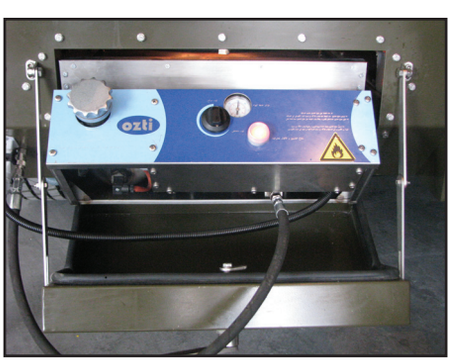

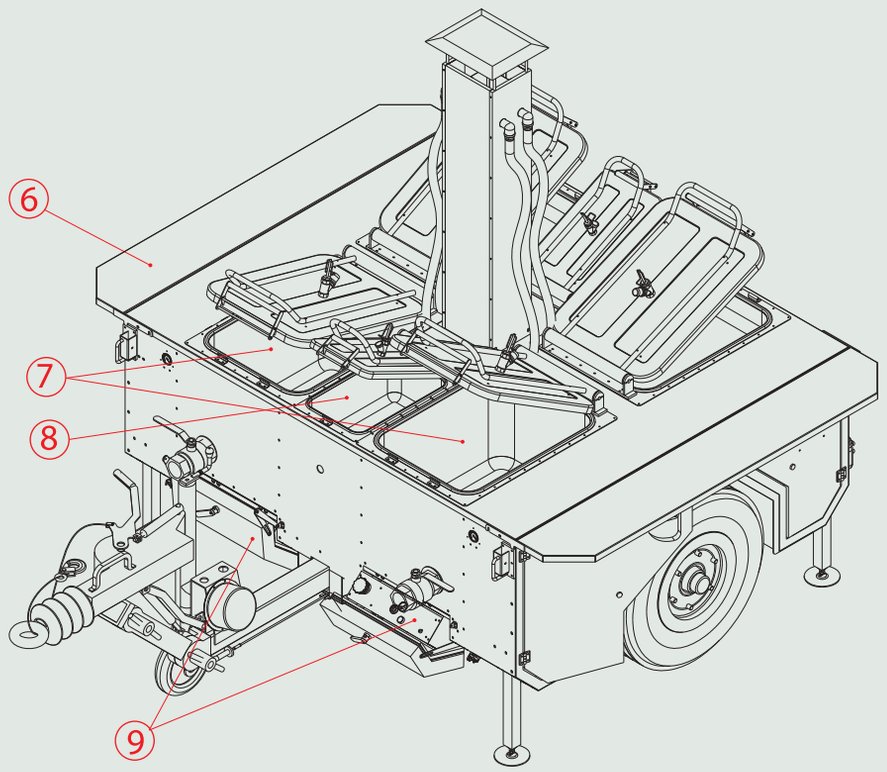

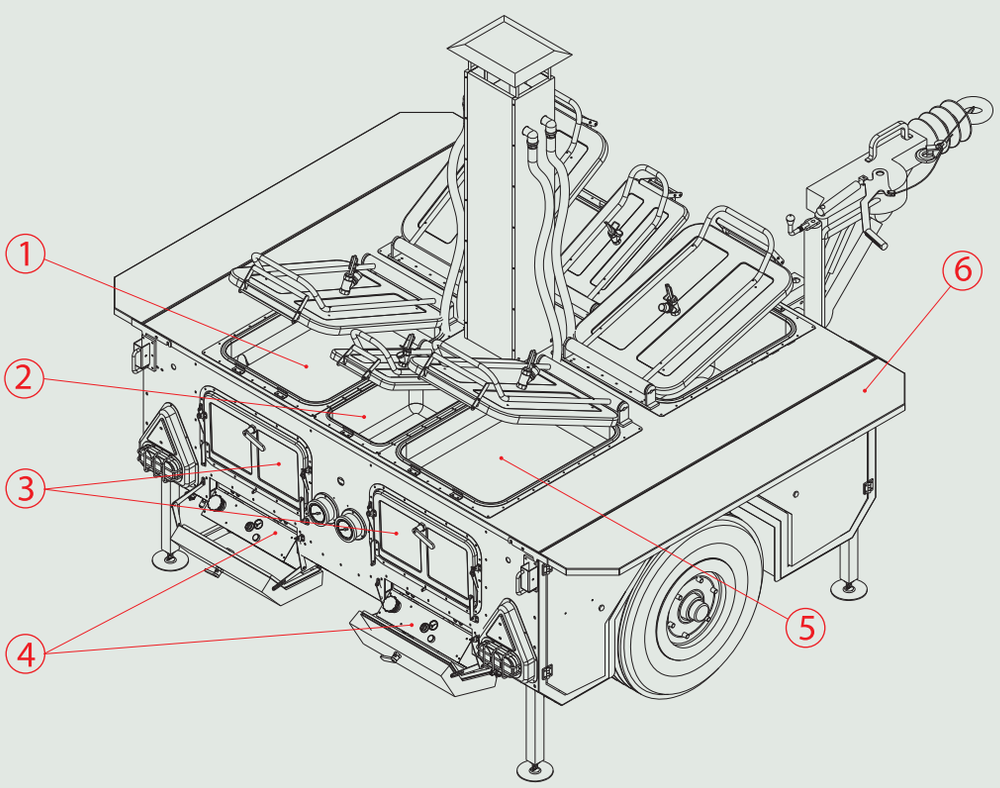

1-LEFT FRYING PAN
2-HOT WATER UNIT
3-OVENS
4-BURNERS
5-RIGHT FRYING PAN
6-WORKING BENCH
7-BOILING PANS
8-HOT WATER UNIT
9-BURNERS

Complete meal for 300 persons is ready in 2 hours!
In emergency simple meal for 600 persons is ready in 2 hours!



Technical Data:

Model No:	OFK 02

Dimensions and Weight:

Net Weight:	approx.1950 kg
Overall length:	3730 mm
Overall width:	2235 mm
Overall height:	approx.2600 mm
Height of work surface, empty:	1050 mm
Height of work surface, loaded:	1000 mm
Length of work surface:	1900 mm
Ground clearance:	300 mm

Chassis with frame:

Overrunning brake with automatic back-up lock	
Towbar height, adjustable	550-1050 mm
Retractable support wheel	1
Handbrake with breakaway cable	1
Asbestos-free brake linings	2
Tyres, 235/75 R17.5	2+1
Stowage compartment	4
Fire extinguisher box	1
NATO towbar eye, standard fitment	1
DIN towbar eye	on request

CE E7

Cooking Unit	Meal Specialty	Cooking Time	Cooking Capacity	Portion Size
Boiling Pan	Soup	60 min	300 person	200 - 250 gr
	Rice	45 min	300 person	300 gr
	Hotplate	It depends on the specialty of food		
Frying Pan	Fried Vegetable	30 min	75 person	70 - 80 gr
	Fried Meat	30-60 min	75 person	200 gr
	Fried Chicken	30 min	75 person	200 - 250 gr
Oven	Meat	120 min	35 person	200 gr
	Chicken	120 min	35 person	200 gr
	Vegetable	120 min	35 person	200 gr
	Bread	120 min	150 pieces	150 gr
Hot Water	Tea	60 min	100 person	1 Cup
	Water	60 min	100 person	1 Cup

COOKING EQUIPMENT	
PRESSURE BOILING PAN150 LT	2
FRYING PAN 50 LT	2
OVEN (2 x 2/1 GN) 73 LT	2
HOT WATER UNIT 34 LT	2

BURNERS	
DIESEL BURNER	4
SOLID FUEL BURNER	4

ADD-ONS	
AIR COMPRESSOR	S
GENERATOR	S
WATER TREATMENT	S
WORKING TABLE / BENCH	S
WEATHER PROTECTION (PVC TARPAULIN)	O
COTTON FAT-ABSORBING FLEECE	O
STEAM COOKER STRAINER (PERFORAD 2/1 GN)	S

S: Standard O: Optional

Standard Features

Water Treatment



Water treatment unit designed to provide clean water from raw water sources for general purposes like cleaning the equipments or the kitchen.
With the capacity of 1500 l/h, the system removes the dirt and disinfects the bacteria in the raw water.

Generator



Engine Type	4-Stroke Diesel
Cooling System	Air Cooled
Oil Storage Capacity	1.75 lt.
Alternator Type	Monophase
Continuous Voltage	230 V
Continuous Frequency	50 Hz.
Continuous Current	30.4 AMP.
Continuous Output	7 kVA
Max. Output	7.5 kVA
Fuel Consumption	2.32-2.4 l / h
Ext. Dimension(L x W x H)	865 x 598 x 650 mm.
Total Weight	120-145 kg.
Fuel Tank Capacity	16 lt.

Field Kitchens with liquid fuel constantly need pressurized air. In order to meet the pressurized air requirement, a generator is supplied with mobile kitchen.

Water Hose With Spray and Fire Extinguisher



In case of fire it provides self protection.

Air Compressor



Model	DKC 150
Liter	125
Bar	8
Lt./min.	327
1/min.	800
kW/Hp	1.5 / 2,0
Dimension (mm)	1350 x 420 x 850
Weight	110 kg.

Field Kitchens with liquid fuel constantly need pressurized air. In order to meet the need pressurized air requirement, a compressor is supplied with mobile kitchen.

Boiling Pan

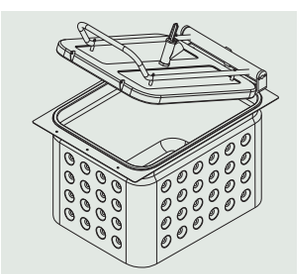

150 lt. pressure boiling pan (Gastronorm Size) provide hygienic and biological cooking advantage , as well as fuel saving up to % 70 as a result of shorter cooking time.

Volume	150 lt.
Working temperature (inside of the pressure boiling pan)	110 °C
Max. working pressure in the outer jacket	0,5 bar

Frying Pan

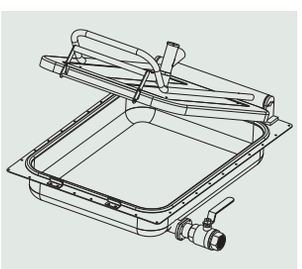

The triple layer material at the bottom of frying pan provides heat distribution even across entire cooking surface. Frying pans are made of AISI 304 CrNi stainless steel.

Volume capacity	50 lt.
Working pressure	0,2 bar

Hot Water

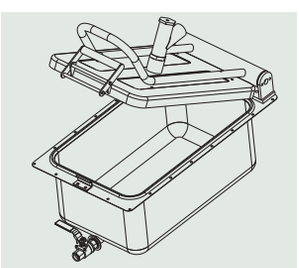

Hot water is always neccesary on field for cleaning vegetables, cleaning the equipments, cooking and for making hot beverages like coffee and tea. Hot water units are made of AISI 304 CrNi stainless steel.

Volume capacity	34 lt.
Working pressure	0,2 bar

Oven

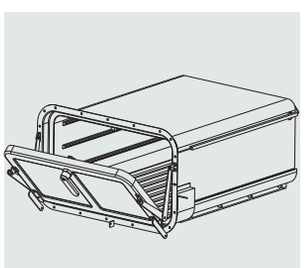

Oven (73 lt.) is located at the rear of the unit. It has been designed to place 2 GN 2/1 - 65 mm tray.

Volume capacity	73 lt.

Liquid Fuel Burner

Ozti Liquid Fuel Burner is designed for burning diesel, kerosene and gas oil. It's high efficiency burning unit intended for quick operation.

The fuel pressurized inside the fuel tank burns efficiently with heat energy which can be adjusted between 15 kW/hour and 25 kW/hour.

Following sources and equipments are needed for operation of Liquid Fuel Burner.

1. Power Supply: 24 ± 5 V DC energy is required for operation of the burner.
2. Compressed Air Supply: 6 bar compressed air is required for operation of the burner.

Dry Weight	27 kg
Estimate Gross Weight	35 kg
External Dimensions	820 x 464 x 235 mm
Air Tank Volume	6,8 lt.
Air Tank Operating Pressure	2,5 – 6,0 bar
Check Valve Bleeding Pressure	9 bar
Fuel Tank Volume	8,0 lt.
Fuel Consumption	Max.: 2,5 lt. / hr. 25 kW Min.: 1,5 lt. / hr. 15 kW

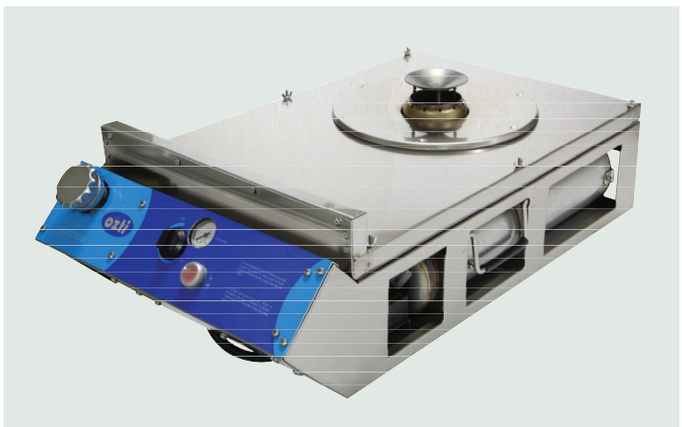

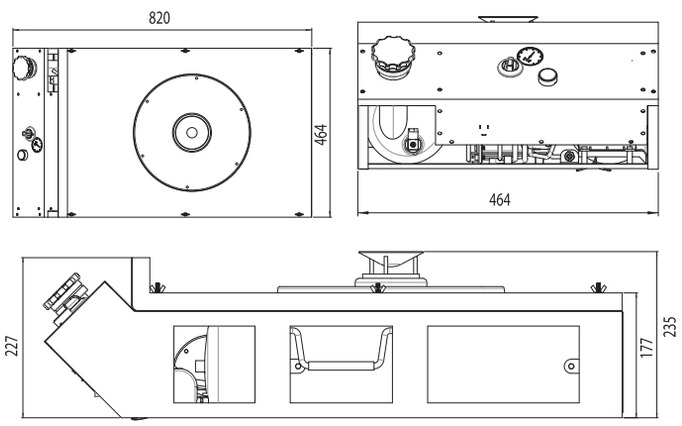

Solid Fuel Burner

In emergency situations solid fuel burner operating with wood, coal, peat etc. can be used instead of liquid fuel burner or LPG burner. Handles for easy carrying and loading. Two side sliding front covers for enabling or stoping air-flow into the fire.
Solid fuel burner is made of Stainless Steel.

DIMENSIONS:
763 x 430 x 200 mm



Placement of Burner

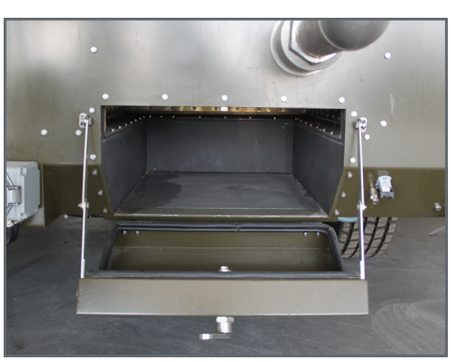



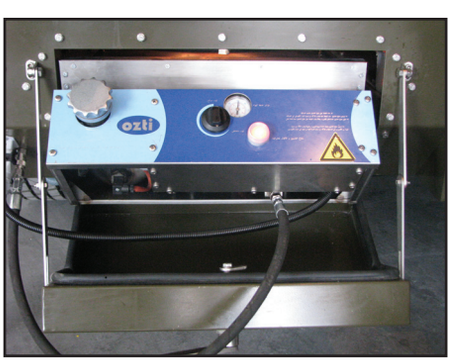

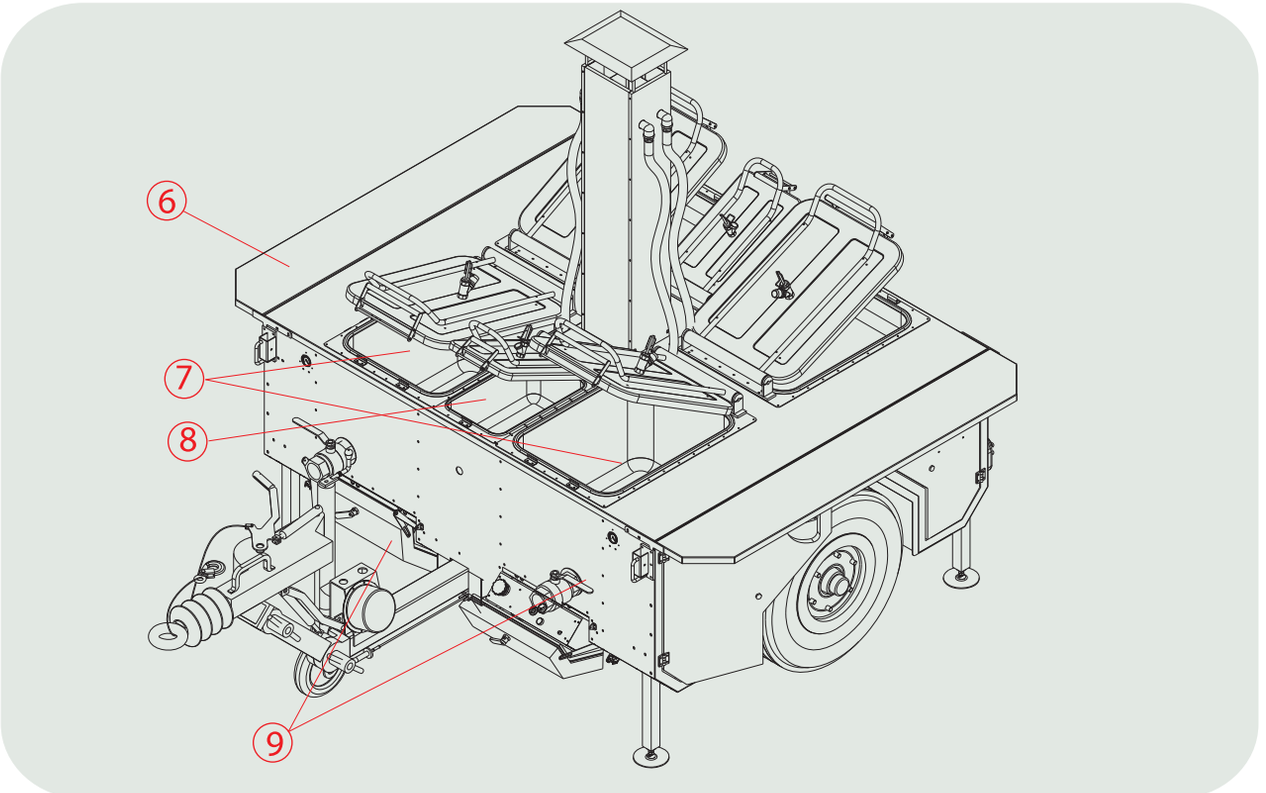

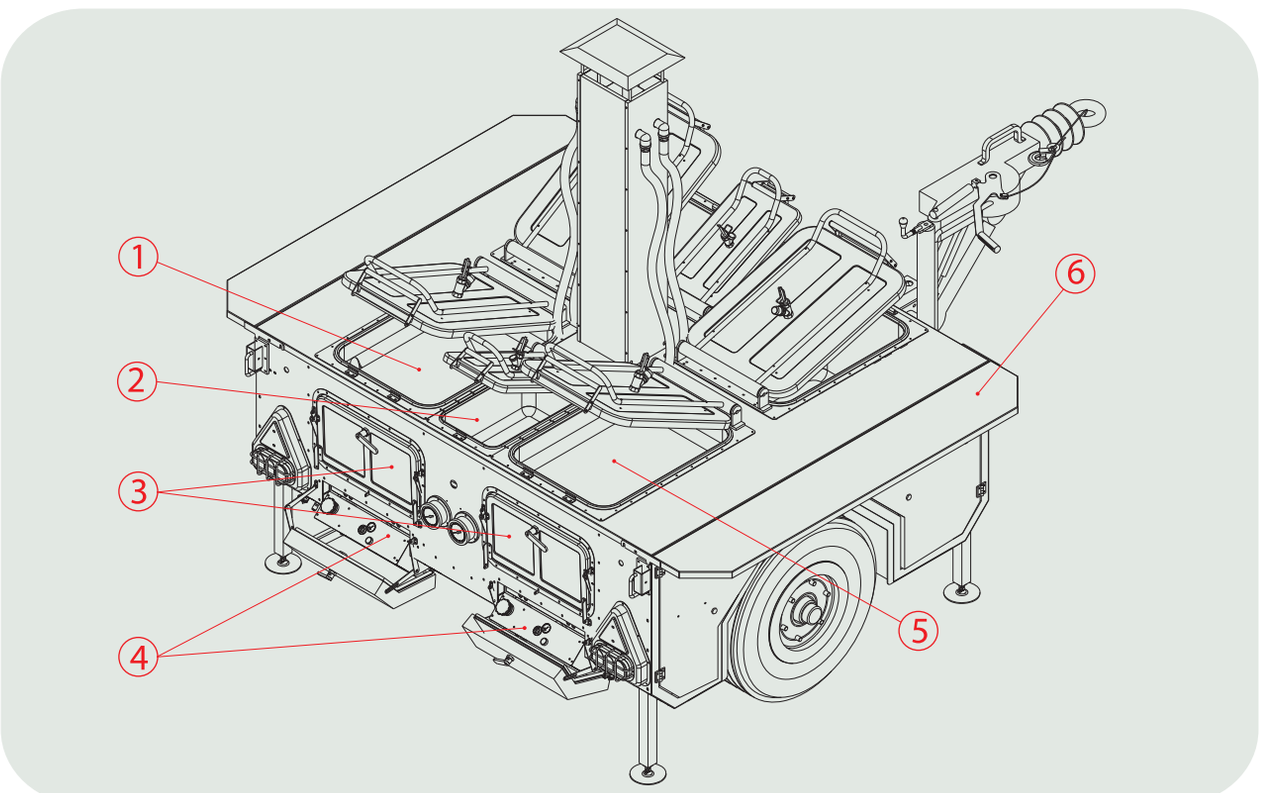

1-LEFT FRYING PAN
2-HOT WATER UNIT
3-OVENS
4-BURNERS
5-RIGHT FRYING PAN
6-WORKING BENCH
7- BOILING PANS
8-FRONT HOT WATER
9-BURNERS

Complete meal for 200 persons is ready in 2 hours!
In emergency simple meal for 400 persons is ready in 2 hours!



Technical Data:

Model No:	OFK 03

Dimensions and Weight:

Net Weight:	approx.1460 kg
Overall length:	3840 mm
Overall width:	2135 mm
Overall height:	approx.2300 mm
Height of work surface, empty:	840 mm
Height of work surface, loaded:	800 mm
Length of work surface:	2000 mm
Ground clearance:	250 mm

Chassis with frame:

Overrunning brake with automatic back-up lock	
Towbar height, adjustable	550-1050 mm
Retractable support wheel	1
Handbrake with breakaway cable	1
Asbestos-free brake linings	2
Tyres, 225/75 R16	2+1
Stowage compartment	4
Fire extinguisher box	1
NATO towbar eye, standard fitment	1
DIN towbar eye	on request

CE E7

Cooking Unit		Meal Specialty	Cooking Time	Cooking Capacity	Portion Size
Boiling Pan		Soup	60 min	200 person	200 - 250 gr
		Rice	45 min	200 person	300 gr
		Hotplate	It depends on the specialty of food		
		Steam Cooking	It depends on the specialty of food		
Frying Pan	Fried Food	Fried Potato	30 min	150 person	200 gr
		Fried Meat	30-60 min	60 person	200 gr
		Fried Chicken	30 min	60 person	200 - 250 gr
		Fried fish	30 min	60 person	200 - 250 gr
	Grill	Meatballs	30 min	100 person	125 gr
		Grilled Meat	30 min	50 person	150 gr
		Grilled Chicken	30 min	75 person	150 gr
		Hamburger	30 min	100 pieces	125 gr

COOKING EQUIPMENT	
PRESSURE BOILING PAN150 LT	2
FRYING PAN 50 LT	2

BURNERS	
LPG BURNER	4
SOLID FUEL BURNER	4

ADD-ONS	
WORKING TABLE / BENCH	S
WEATHER PROTECTION (PVC TARPAULIN)	O
COTTON FAT-ABSORBING FLEECE	O
LPG TUBE	S
STEAM COOKER STRAINER (PERFORAD 2/1 GN)	S

S : Standard O : Optional

Standard Features

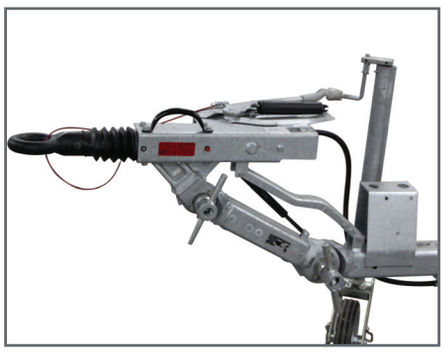
Tow Bar


Workingbench

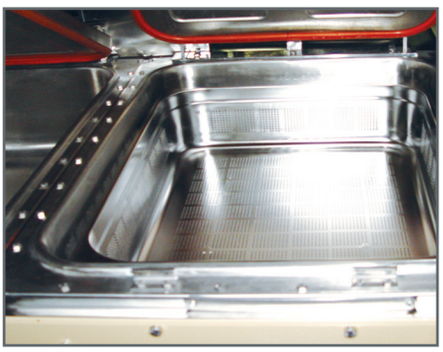
Steam Cooker


Boiling Pan Double Jacket
Water Level Controlling

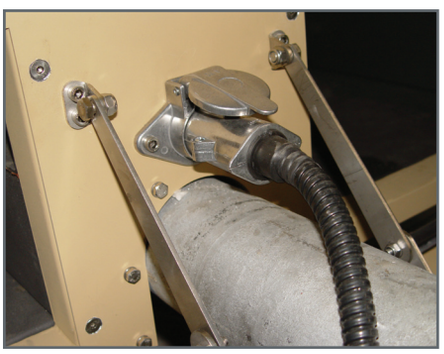
Trailer Cable Socket

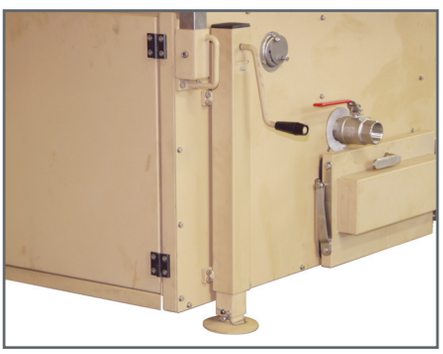
Landing leg


Lighting


LPG Tube

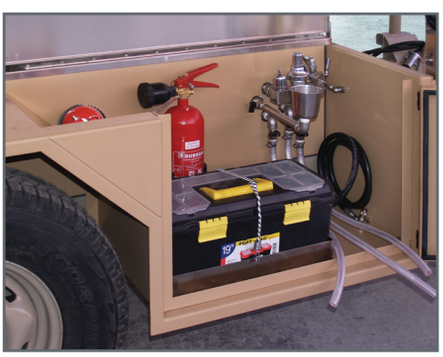
Vehicle Tool Kit

Boiling Pan

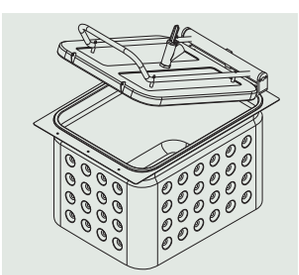

150 lt. pressure boiling pan (Gastronorm Size) provide hygienic and biological cooking advantage , as well as fuel saving up to % 70 as a result of shorter cooking time.

Volume	150 lt.
Working temperature (inside of the pressure boiling pan)	110 °C
Max. working pressure in the outer jacket	0,5 bar

Frying Pan

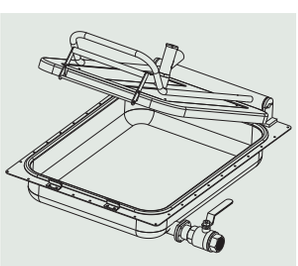

The triple layer material at the bottom of frying pan provides even heat distribution across entire cooking surface. Frying pans are made of AISI 304 CrNi stainless steel.

Volume capacity	50 lt.
Working pressure	0,2 bar

LPG Burner

Ozti LPG Burner produces max 15 kW. It that has efficient cooking features is silent and scentless.

Weight	9,4 kg
External Dimensions	690 x 409 x 216,5 mm
LPG Consumption	Max.:1.5 kg. / hr 15 kW

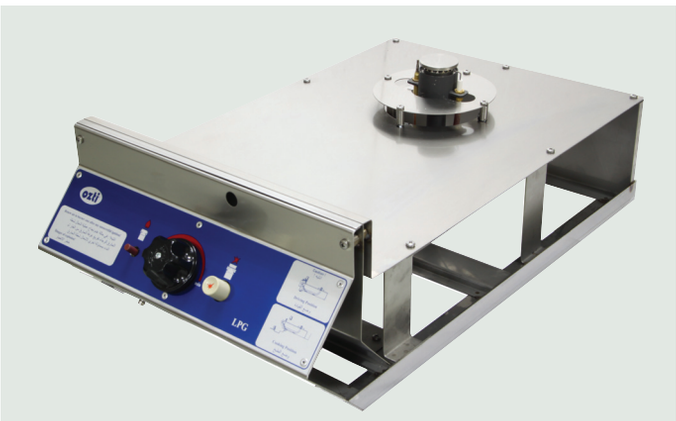

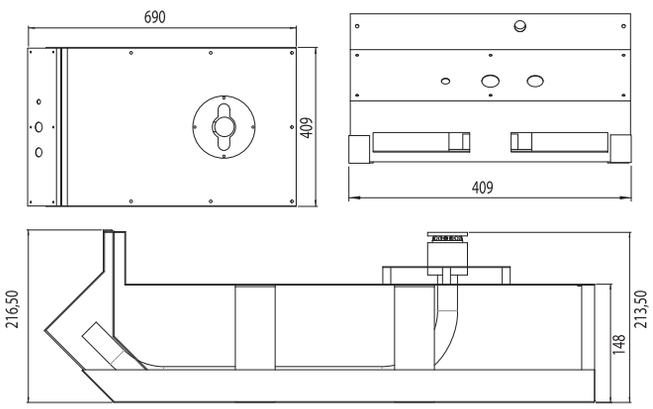

Solid Fuel Burner

In emergency situations solid fuel burner operating with wood, coal, peat etc. can be used instead of liquid fuel burner or LPG burner. Handles for easy carrying and loading. Two side sliding front covers for enabling or stoping air-flow into the fire.
Solid fuel burner is made of Stainless Steel.

DIMENSIONS:
763 x 430 x 200 mm



Placement of Burner

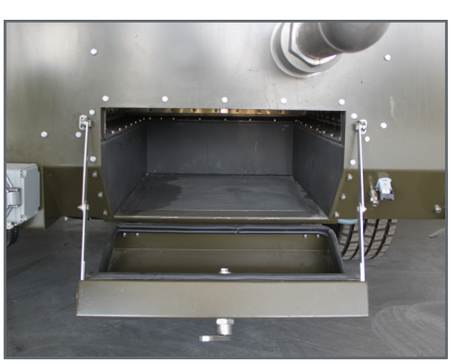



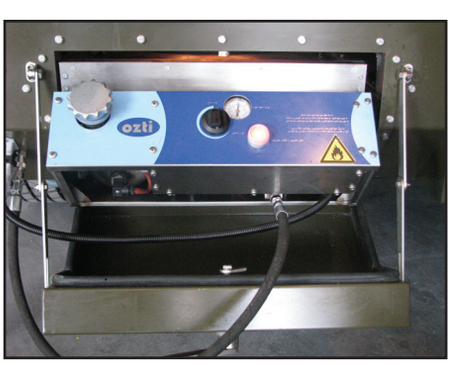

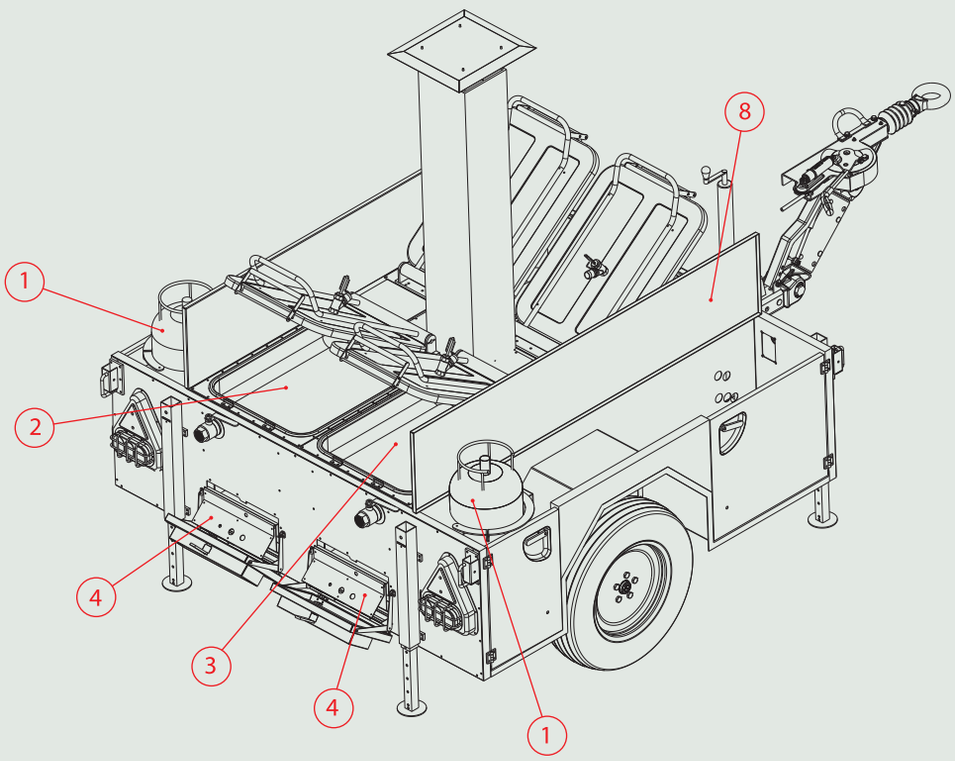

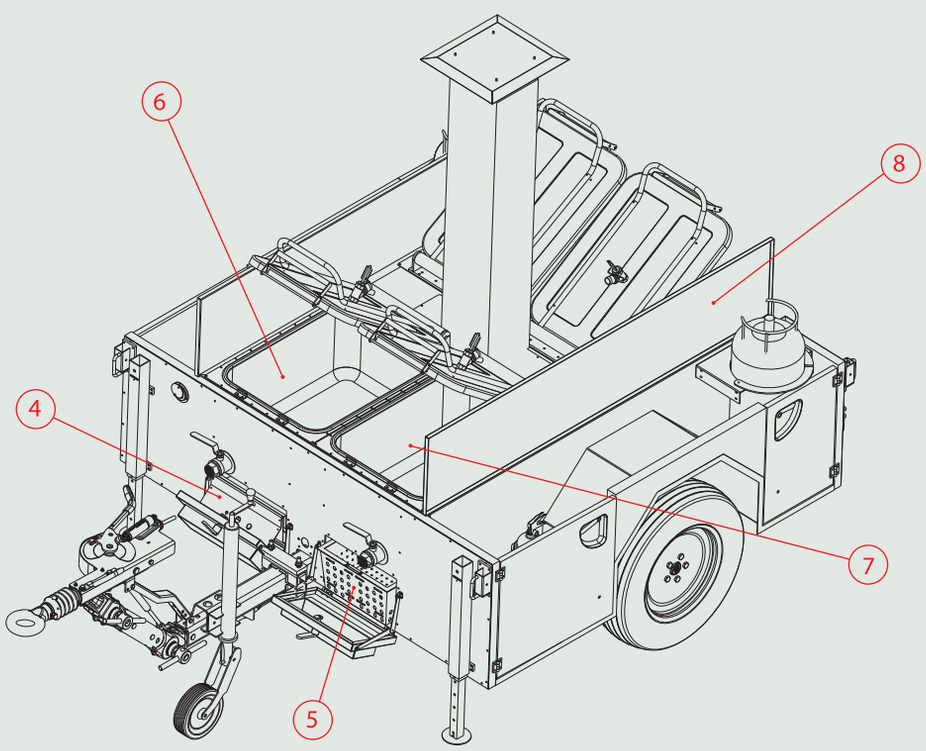

1-LPG TANK
2-LEFT FRYING PAN
3-RIGHT FRY ING PAN
4-LPG BURNER
5-SOLID FUEL BURNER
6-LEFT BOILING PAN
7-RIGHT BOILING PAN
8-WORKING BENCH

Complete meal for 800 persons is ready in 2 hours!
In emergency simple meal for 1000 persons is ready in 2 hours!



Technical Data:

Model No:	OFK 04

Dimensions and Weight:

Net Weight:	approx.2200 kg
Overall length:	3840 mm
Overall width:	2240 mm
Overall height:	approx.2600 mm
Height of work surface, empty:	1150 mm
Height of work surface, loaded:	1100 mm
Length of work surface:	1910 mm
Ground clearance:	300 mm

Chassis with frame:

Overrunning brake with automatic back-up lock	
Towbar height, adjustable	550-1050 mm
Retractable support wheel	1
Handbrake with breakaway cable	1
Asbestos-free brake linings	2
Tyres, 235/75 R17.5	2+1
Stowage compartment	4
Fire extinguisher box	1
NATO towbar eye, standard fitment	1
DIN towbar eye	on request

CE E7

Cooking Unit	Meal Specialty	Cooking Time	Cooking Capacity	Portion Size
Boiling Pan	Soup	60 min	400 person	200 - 250 gr
	Rice	45 min	400 person	300 gr
	Hotplate	It depends on the specialty of food		
Frying Pan	Fried Vegetable	30 min	75 person	70 - 80 gr
	Fried Meat	30-60 min	75 person	200 gr
	Fried Chicken	30 min	75 person	200 - 250 gr
	Tempe	60 min	400 person	800 pieces
	Dofu	60 min	400 person	800 pieces
	Kurupuk	20 min	400 person	800 pieces
Oven	Meat	120 min	50 person	200 gr
	Chicken	120 min	50 person	200 gr
	Vegetable	120 min	50 person	200 gr
	Bread	120 min	150 pieces	150 gr
Hot Water	Tea	60 min	100 person	1 Cup
	Water	60 min	100 person	1 Cup

COOKING EQUIPMENT	
PRESSURE BOILING PAN190 LT	2
FRYING PAN 50 LT	1
FRYING PAN 100 LT	1
OVEN (3 x 2/1 GN) 105 LT	1
HOT WATER UNIT 34 LT	2

BURNERS	
DIESEL BURNER	4
SOLID FUEL BURNER	4

ADD-ONS	
AIR COMPRESSOR	S
GENERATOR	S
WATER TREATMENT	S
HOIST	S
WORKING TABLE / BENCH	S
WEATHER PROTECTION (PVC TARPAULIN)	O
COTTON FAT-ABSORBING FLEECE	O
PLATFORM	S
PRESSURE COOKER STRAINER	S
STEAM COOKER STRAINER (PERFORAD 2/1 GN)	S

S: Standard O: Optional

Standard Features

Water Treatment

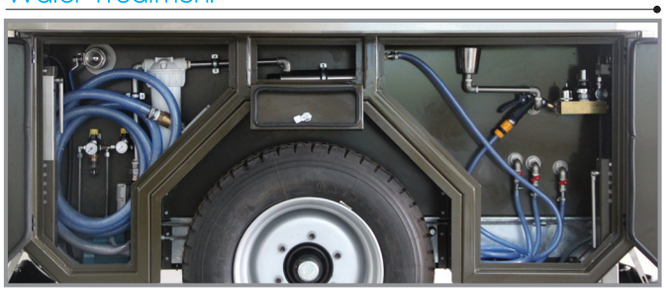

Water treatment unit designed to provide clean water from raw water sources for general proposes like cleaning the equipments or the kitchen.
With the capacity of 1500 l/h, the system removes the dirt and disinfects the bacteria in the raw water.

Water Hose With Spray and Fire Extinguisher



In case of fire it provides self protection.

Boiling Pan

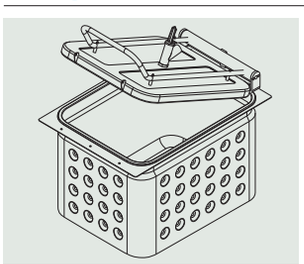

150 lt. pressure boiling pan (Gastronorm Size) provide hygienic and biological cooking advantage , as well as fuel saving up to % 70 as a result of shorter cooking time.

Volume	150 lt.
Working temperature (inside of the pressure boiling pan)	110 °C
Max. working pressure in the outer jacket	0,5 bar

Frying Pan

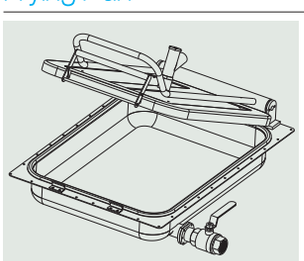

The triple layer material at the bottom of frying pan provides heat distribution even across entire cooking surface. Frying pans are made of AISI 304 CrNi stainless steel.

Frying Pan 1 Volume capacity	100 lt.
Frying Pan 2 Volume capacity	50 lt.
Working pressure	0,2 bar

Hot Water

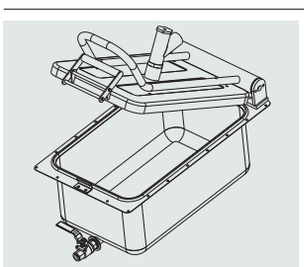

Hot water is always neccesary on field for cleaning vegetables, cleaning the equipments, cooking and for making hot beverages like coffee and tea. Hot water units are made of AISI 304 CrNi stainless steel.

Volume capacity	34 lt.
Working pressure	0,2 bar

Generator



Engine Type	4-Stroke Diesel
Cooling System	Air Cooled
Oil Storage Capacity	1.75 lt.
Alternator Type	Monophase
Continuous Voltage	230 V
Continuous Frequency	50 Hz.
Continuous Current	30.4 AMP.
Contniuous Output	7 kVA
Max. Output	7.5 kVA
Fuel Consumption	2.32-2.4 l / h
Ext. Dimension(L x W x H)	865 x 598 x 650 mm.
Total Weight	120-145 kg.
Fuel Tank Capacity	16 lt.

Field Kitchens with liquid fuel constantly need pressurized air. In order to meet the pressurized air requirement, a generator is supplied with mobile kitchen.

Air Compressor



Model	DKC 150
Liter	125
Bar	8
Lt./min.	327
1/min.	800
kW/Hp	1.5 / 2.0
Dimension (mm)	1350 x 420 x 850
Weight	110 kg.

Field Kitchens with liquid fuel constantly need pressurized air. In order to meet the need pressurized air requirement, a compressor is supplied with mobile kitchen.

Hoist

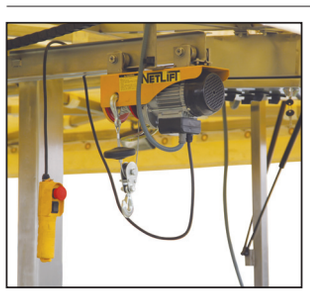

Capacity	(125 -25 (kg) Q
Voltage	230 / 50(V)
Engine Power	580 (W)
Protection class	IP 40
Wire rope length	12 (m)
Lifting Speed	10 m / min (125 kg) 5 m / min (250 kg)

OFK 4 is equipped with an electrical wire hoist to lift the strainer easily out of the boiling pan. The hoist itself works with an hand control unit and the rail system adapted to the kitchen is to move hoist and the strainer to the sides.

The hoist has a limit switch and an emergency stop button to provide maximum user protection.

Oven

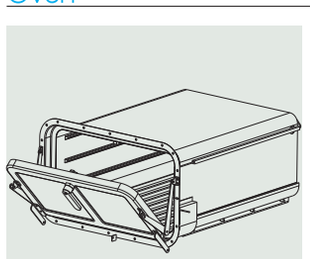

Oven (73 lt.) is located at the rear of the unit. It has been designed to place 2 GN 2/1 - 65 mm tray.

Volume capacity	73 lt.

Liquid Fuel Burner

Ozti Liquid Fuel Burner is designed for burning diesel, kerosene and gas oil. It's high efficiency burning unit intended for quick operation.

The fuel pressurized inside the fuel tank burns efficiently with heat energy which can be adjusted between 15 kW/hour and 25 kW/hour.

Following sources and equipments are needed for operation of Liquid Fuel Burner.

1. Power Supply: 24 ± 5 V DC energy is required for operation of the burner.
2. Compressed Air Supply: 6 bar compressed air is required for operation of the burner.

Dry Weight	27 kg
Estimate Gross Weight	35 kg
External Dimensions	820 x 464 x 235 mm
Air Tank Volume	6,8 lt.
Air Tank Operating Pressure	2,5 – 6,0 bar
Check Valve Bleeding Pressure	9 bar
Fuel Tank Volume	8,0 lt.
Fuel Consumption	Max.: 2,5 lt. / hr. 25 kW Min.: 1,5 lt. / hr. 15 kW

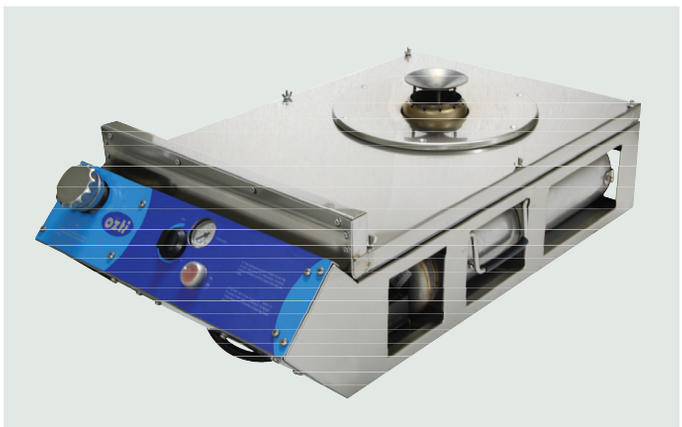

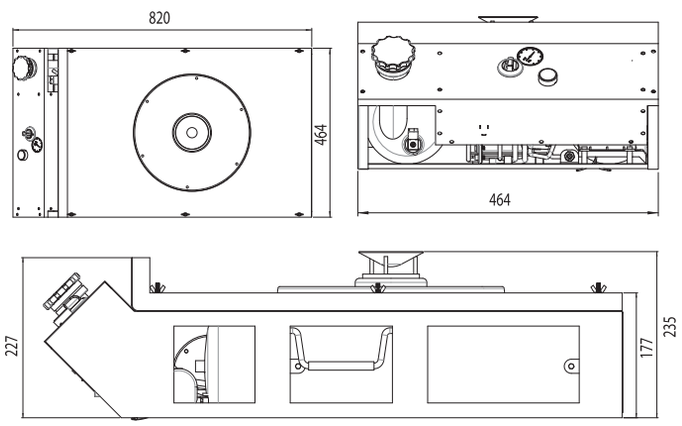

Solid Fuel Burner

In emergency situations solid fuel burner operating with wood, coal, peat etc. can be used instead of liquid fuel burner or LPG burner. Handles for easy carrying and loading. Two side sliding front covers for enabling or stoping air-flow into the fire.
Solid fuel burner is made of Stainless Steel.

DIMENSIONS:
763 x 430 x 200 mm



Placement of Burner

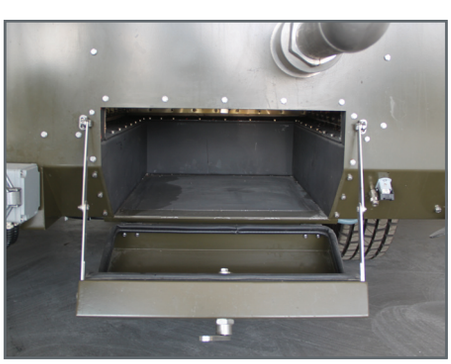



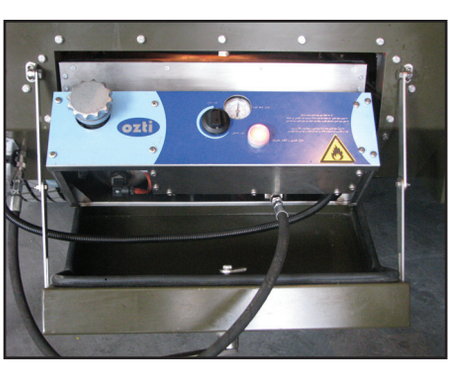

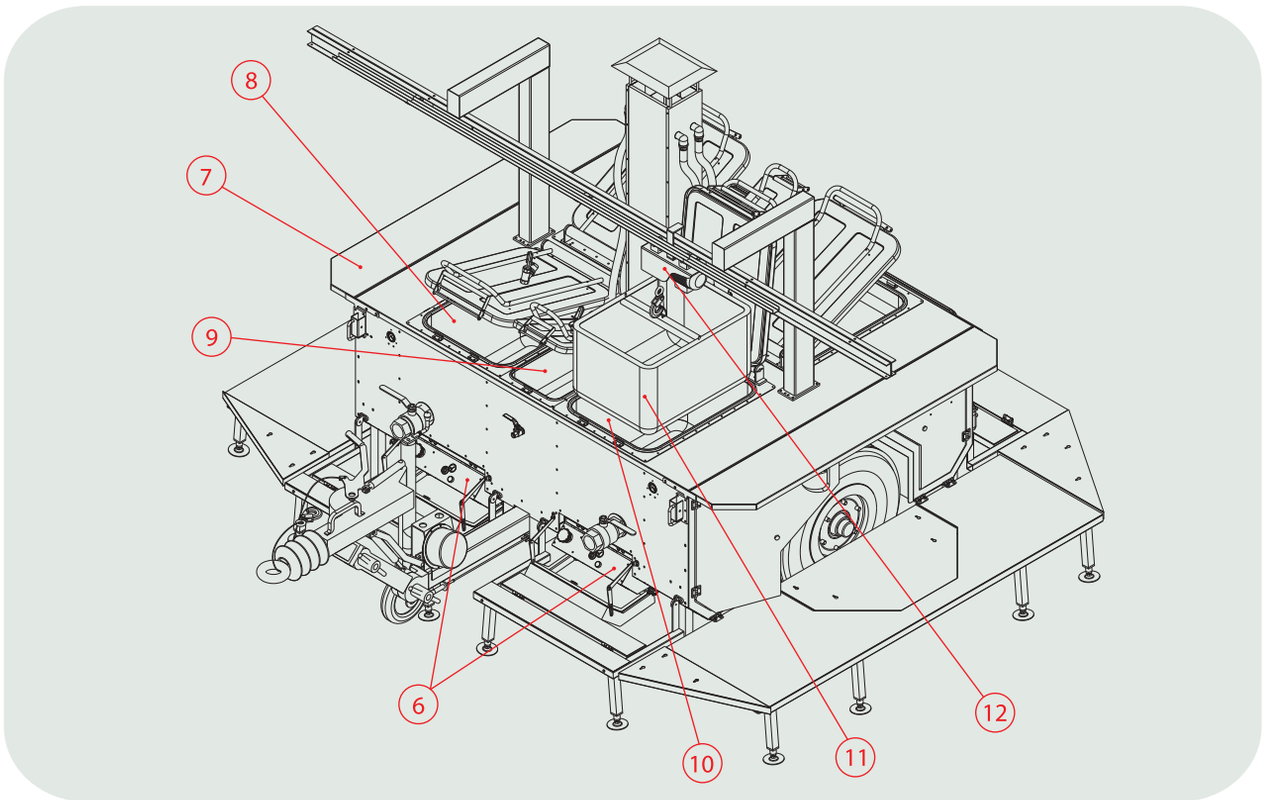

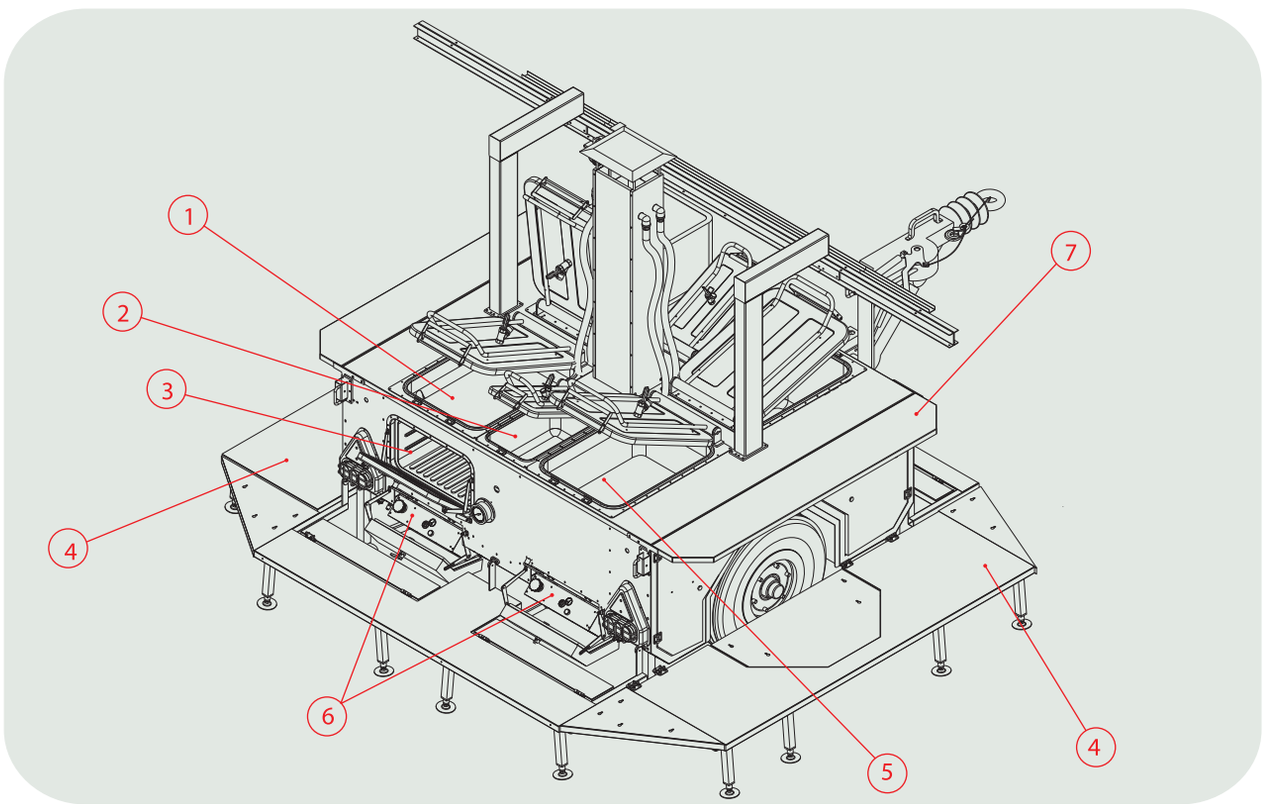

1-FRY ING PAN
2-HOT WATER UNIT
3-OVEN
4-PLATFORM
5-BOILING PAN
6-BURNERS
7-WORKING BENCH
8-FRY ING PAN
9-HOT WATER UNIT
10-BOILING PAN
11-STRAINER
12-HOIST

Complete meal for 400 persons is ready in 2 hours!
In emergency simple meal for 800 persons is ready in 2 hours!



Technical Data:

Model No:	OFK 05

Dimensions and Weight:

Net Weight:	approx.1950 kg
Overall length:	3730 mm
Overall width:	2235 mm
Overall height:	approx.2600 mm
Height of work surface, empty:	1050 mm
Height of work surface, loaded:	1000 mm
Length of work surface:	1900 mm
Ground clearance:	300 mm

Chassis with frame:

Overrunning brake with automatic back-up lock	
Towbar height, adjustable	550-1050 mm
Retractable support wheel	1
Handbrake with breakaway cable	1
Asbestos-free brake linings	2
Tyres, 235/75 R17.5	2+1
Stowage compartment	4
Fire extinguisher box	1
NATO towbar eye, standard fitment	1
DIN towbar eye	on request

CE E7

Cooking Unit	Meal Specialty	Cooking Time	Cooking Capacity	Portion Size
Boiling Pan	Soup	60 min	400 person	200 - 250 gr
	Rice	45 min	400 person	300 gr
	Hotplate	It depends on the specialty of food		
	Couscous	60 min	400 person	300 gr
Frying Pan	Fried Vegetable	30 min	75 person	70 - 80 gr
	Fried Meat	30-60 min	75 person	200 gr
Oven	Fried Chicken	30 min	75 person	200 - 250 gr
	Meat	120 min	50 person	200 gr
	Chicken	120 min	50 person	200 gr
	Vegetable	120 min	50 person	200 gr
	Bread	120 min	150 pieces	150 gr
Hot Water	Tea	60 min	100 person	1 Cup
	Water	60 min	100 person	1 Cup

COOKING EQUIPMENT	
PRESSURE BOILING PAN190 LT	2
COUSCOUS COOKER (STEAM COOKER) 100 LT	1
FRYING PAN 50 LT	2
OVEN (3 x 2/1 GN) 105 LT	2
HOT WATER UNIT 34 LT	2

BURNERS	
DIESEL BURNER	4
SOLID FUEL BURNER	4

ADD-ONS	
AIR COMPRESSOR	S
GENERATOR	S
WATER TREATMENT	S
WORKING TABLE / BENCH	S
WEATHER PROTECTION (PVC TARPAULIN)	O
COTTON FAT-ABSORBING FLEECE	O
PLATFORM	S
COUSCOUS STRAINER	S
STEAM COOKER STRAINER (PERFORAD 2/1 GN)	S

S: Standard O: Optional

Standard Features

Water Treatment



Water treatment unit designed to provide clean water from raw water sources for general proposes like cleaning the equipments or the kitchen.
With the capacity of 1500 l/h, the system removes the dirt and disinfects the bacteria in the raw water.

Water Hose With Spray and Fire Extinguisher



In case of fire it provides self protection.

Boiling Pan

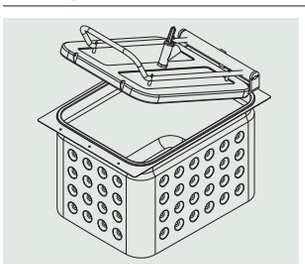

150 lt. pressure boiling pan (Gastronorm Size) provide hygienic and biological cooking advantage , as well as fuel saving up to % 70 as a result of shorter cooking time.

Volume	190 lt.
Working temperature (inside of the pressure boiling pan)	110 °C
Max. working pressure in the outer jacket	0,5 bar

Frying Pan

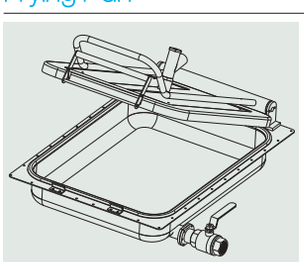

The triple layer material at the bottom of frying pan provides heat distribution even across entire cooking surface. Frying pans are made of AISI 304 CrNi stainless steel.

Frying Pan 2 Volume capacity	50 lt.
Working pressure	0,2 bar

Hot Water

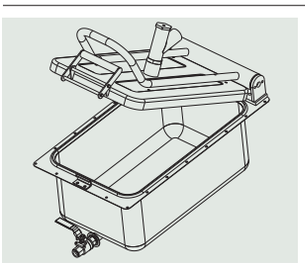

Hot water is always neccesary on field for cleaning vegetables, cleaning the equipments, cooking and for making hot beverages like coffee and tea. Hot water units are made of AISI 304 CrNi stainless steel.

Volume capacity	34 lt.
Working pressure	0,2 bar

Generator



Engine Type	4-Stroke Diesel
Cooling System	Air Cooled
Oil Storage Capacity	1.75 lt.
Alternator Type	Monophase
Continuous Voltage	230 V
Continuous Frequency	50 Hz.
Continuous Current	30.4 AMP.
Continuous Output	7 kVA
Max. Output	7.5 kVA
Fuel Consumption	2.32-2.4 l / h
Ext. Dimension(L x W x H)	865 x 598 x 650 mm.
Total Weight	120-145 kg.
Fuel Tank Capacity	16 lt.

Field Kitchens with liquid fuel constantly need pressurized air. In order to meet the pressurized air requirement, a generator is supplied with mobile kitchen.

Air Compressor



Model	DKC 150
Liter	125
Bar	8
Lt./min.	327
1/min.	800
kW/Hp	1.5 / 2.0
Dimension (mm)	1350 x 420 x 850
Weight	110 kg.

Field Kitchens with liquid fuel constantly need pressurized air. In order to meet the need pressurized air requirement, a compressor is supplied with mobile kitchen.

Couscous

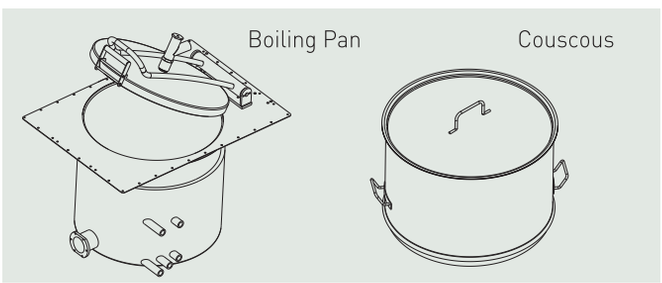

Evacuated jacket is filled with a certain amount of water in order to provide a uniform heating and guarantee that food doesn't burn during cooking process. Max. 0,2 bar operating pressure inside the pans, 0,5 bar inside double-wall is being controlled by appropriate release valves. Pressure boiling pans are made of AISI 304 CrNi stainless steel.

Boiling pan capacity	190 lt.
Couscous capacity	190 lt.

Oven

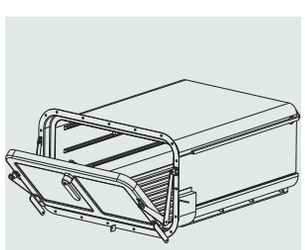

Oven (73 lt.) is located at the rear of the unit. It has been designed to place 2 GN 2/1 - 65 mm tray.

Volume capacity	105 lt.

Liquid Fuel Burner

Ozti Liquid Fuel Burner is designed for burning diesel, kerosene and gas oil. It's high efficiency burning unit intended for quick operation.

The fuel pressurized inside the fuel tank burns efficiently with heat energy which can be adjusted between 15 kW/hour and 25 kW/hour.

Following sources and equipments are needed for operation of Liquid Fuel Burner.

1. Power Supply: 24 ± 5 V DC energy is required for operation of the burner.
2. Compressed Air Supply: 6 bar compressed air is required for operation of the burner.

Dry Weight	27 kg
Estimate Gross Weight	35 kg
External Dimensions	820 x 464 x 235 mm
Air Tank Volume	6,8 lt.
Air Tank Operating Pressure	2,5 – 6,0 bar
Check Valve Bleeding Pressure	9 bar
Fuel Tank Volume	8,0 lt.
Fuel Consumption	Max.: 2,5 lt. / hr. 25 kW Min.: 1,5 lt. / hr. 15 kW

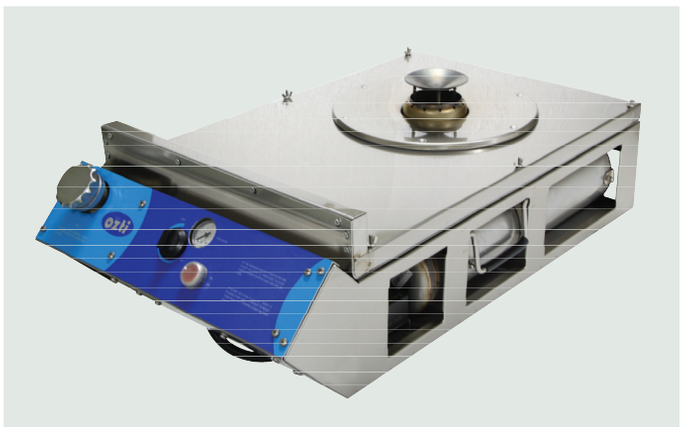

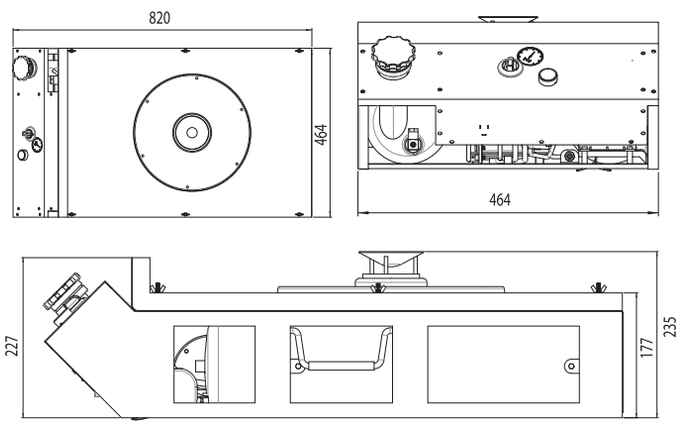

Solid Fuel Burner

In emergency situations solid fuel burner operating with wood, coal, peat etc. can be used instead of liquid fuel burner or LPG burner. Handles for easy carrying and loading. Two side sliding front covers for enabling or stoping air-flow into the fire.
Solid fuel burner is made of Stainless Steel.

DIMENSIONS:
763 x 430 x 200 mm



Placement of Burner

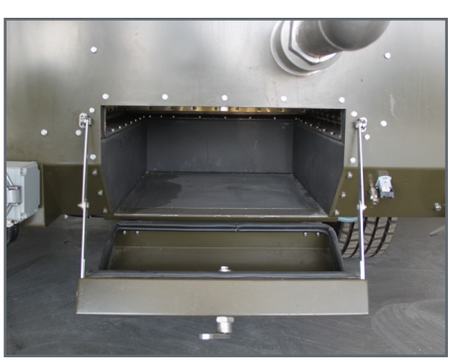



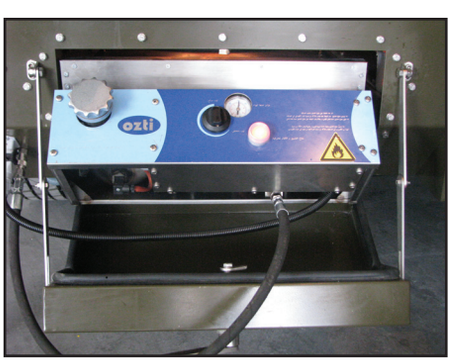

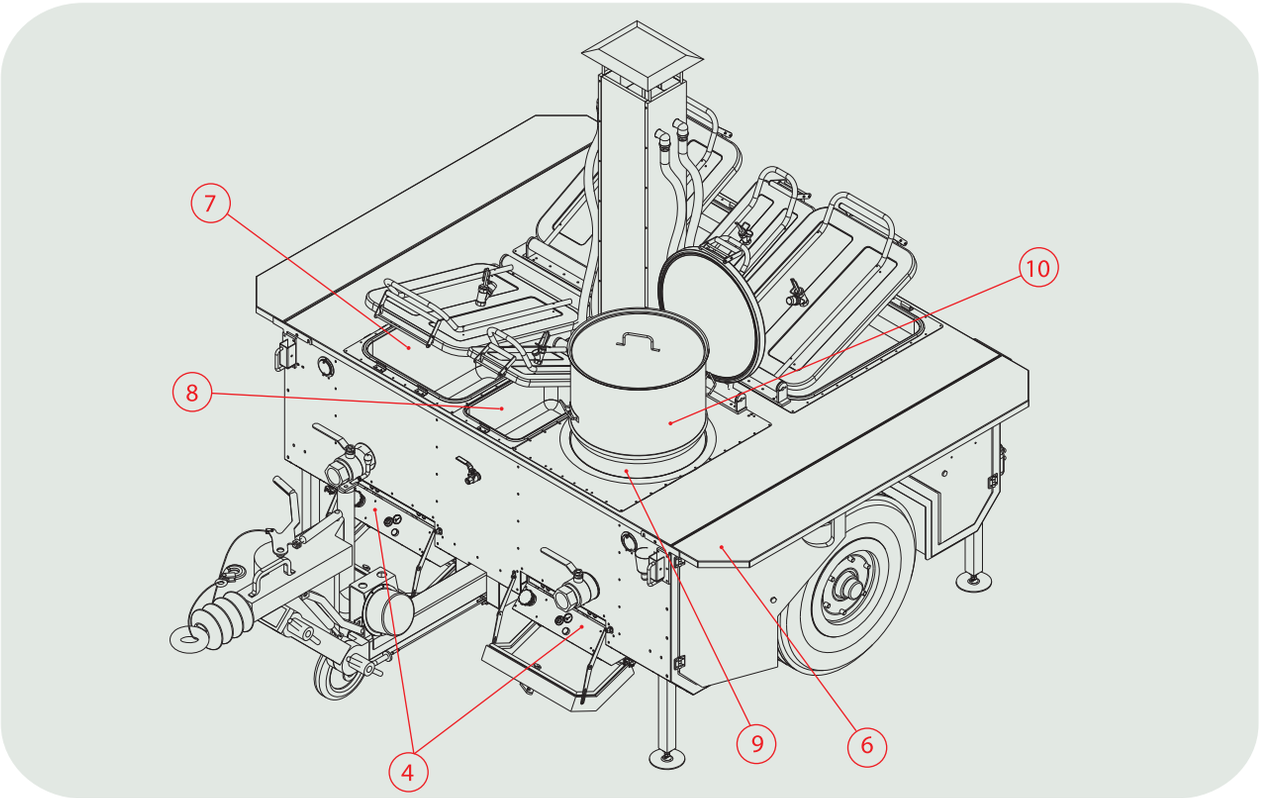

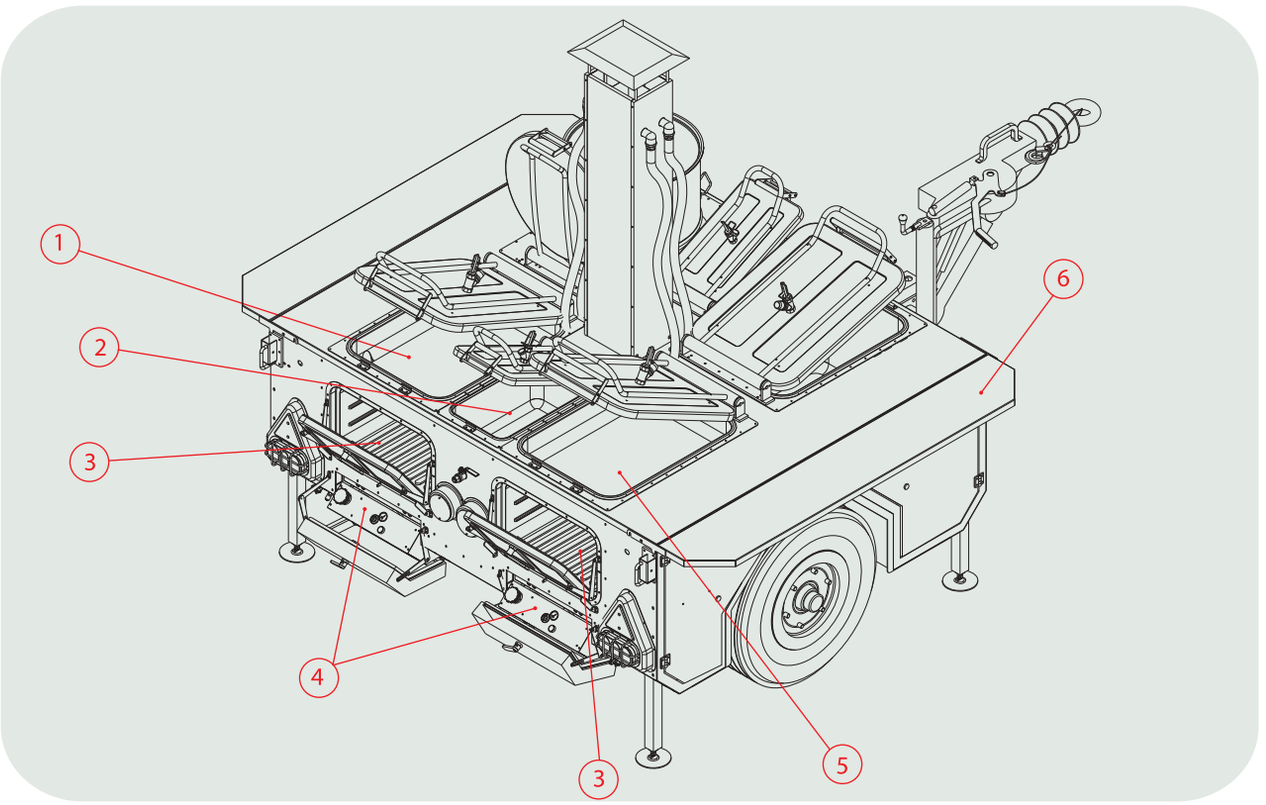

1-LEFT FRYING PAN
2-HOT WATER UNIT
3-OVENS
4-BURNERS
5-RIGHT FRYING PAN
6-WORKING BENCH
7-BOILING PAN
8-HOT WATER UNIT
9-COUSCOUS PAN
10-COUSCOUS POT

OFK 06 V1 Modular — Field Kitchen

Complete meal for 250 persons is ready in 2 hours!



Technical Data:

Model No:	OFK 06 V1

Dimensions and Weight:

Dimensions-awnings closed	3840 mm x 2040 mm x 2650 mm
Dimensions-awnings open	5250 mm x 4420 mm x 2650 mm
Ground Clearance	300 mm
Estimated Weight	2.360 kg

Chassis with frame:

Overrunning brake with automatic back-up lock	
Towbar height, adjustable	550-1050 mm
Retractable support wheel	1
Single Rubber Torsion Axle	1
Gross Trailer Weight	2.600
Coupling NATO	-76.2mm x 41.2 mm

Cooking Unit		Meal Specialty	Cooking Time	Cooking Capacity	Portion Size
Double Wall Cooking Pot		Soup	60 min	200 person	200 - 250 gr
		Rice	45 min	200 person	300 gr
		Hotplate	It depends on the specialty of food		
Single Wall Cooking Unit		Soup	60 min	200 person	200 - 250 gr
		Rice	60 min	200 person	300 gr
		Hotplate	It depends on the specialty of food		
Convection Oven		Meat	120 min	50 person	200 gr
		Chicken	120 min	50 person	200 gr
		Vegetable	120 min	50 person	200 gr
Multifunctional Cooking Unit	Frying Pan	Fried Potato	30 min	50 person	200 gr
		Fried Meat	30-60 min	60 person	200 gr
		Fried Chicken	30 min	60 person	200 - 250 gr
		Fried fish	30 min	60 person	200 - 250 gr
	Grill	Meatballs	30 min	100 person	125 gr
		Grilled Meat	30 min	50 person	150 gr
		Grilled Chicken	30 min	75 person	150 gr
		Hamburger	30 min	100 pieces	125 gr

COOKING EQUIPMENT	
DOUBLE WALL COOKING POT	1
SINGLE WALL COOKING UNIT	1
CONVECTION OVEN	1
MULTIFUNCTIONAL COOKING UNIT	1
DIESEL BURNER	4

ADD-ONS	
WORKING TABLE / BENCH	S
WEATHER PROTECTION (PVC TARPAULIN)	O
COTTON FAT-ABSORBING FLEECE	O

S: Standard O: Optional

CE E7

Standard Features

The OFK.06 Modular kitchen cooking equipments can be operated individually or as a complete kitchen line providing the caterer with great flexibility in the field. The cooking modules are mounted on the trailer so that they can be transported quickly and easily to the operation site. OFK.06 is operated by means of the OZTI new generation diesel burner. OFK.06 can be deployed to support feeding requirements in disaster areas or military operations.

Double Wall Cooking Pot

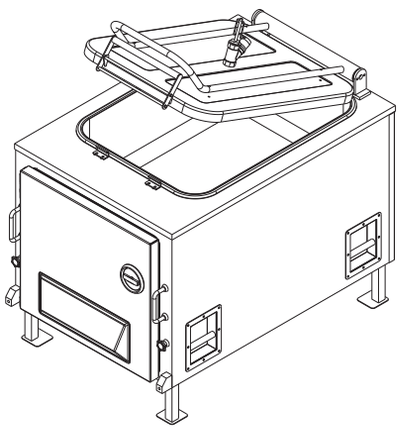

OFK.06 is equipped with a double wall pressure cooking pot of 110 liters capacity. Double wall pressure cooking pot can work either on its place over the trailer or standing alone on its special leg construction.Inner pot is made of deep drawing high quality stainless steel, and provides stability against pressure and highest hygiene standard Outer walls of the pot are such welded to deep drawn inner pot not to allow any steam leakage Hot steam obtained by heating the innerjacket water and heat is distributed homogenously within this hot steam. This advanced kitchen equipment provides modern cooking technics from biological cooking to roasting.

Estimated Weight	170 kg
Dimensions-legs open	1100 mm x 700 mm x 950 mm
Inner Pot Dimensions	550 mm x 750 mm x 280 mm
Volumetric Capacity	110 liters
Purposive Capacity	85 liters

Multifunctional Cooking Unit

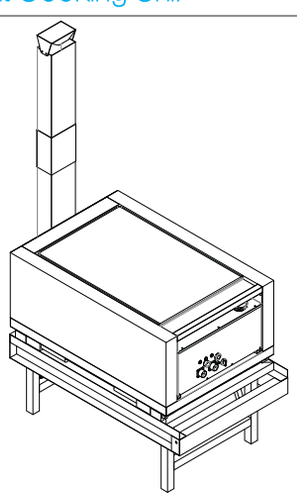

OFK 06 is equipped with a real flexy cooking system... Multifunctional cooking unit is one of our new kitchen wizards which can easily changes itself from a grill to a fryer... Multifunctional unit also can stand alone by the help of its retractable, foldable leg frame.

Estimated Weight	140 kg
Dimensions-legs open	1100 mm x 700 mm x 950 mm
Grill Surface	745 mm x 525 mm
Volumetric Capacity of Pan	38 liters

Single Wall Cooking Unit

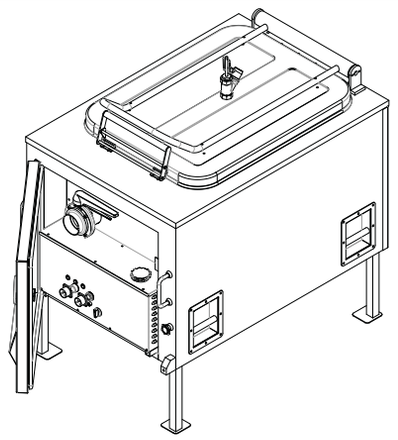

Kitchen is equipped with a single wall cooking unit with 125 liters capacity for traditional cookings. This unit is made of deep drawing high quality stainless steel, and provides stability against pressure and highest hygiene standard.

Estimated Weight	140 kg
Dimensions-legs open	1100 mm x 700 mm x 950 mm
Pot Dimensions	550 mm x 750 mm x 320 mm
Volumetric Capacity	125 liters
Purposive Capacity	100 liters

Convection Oven

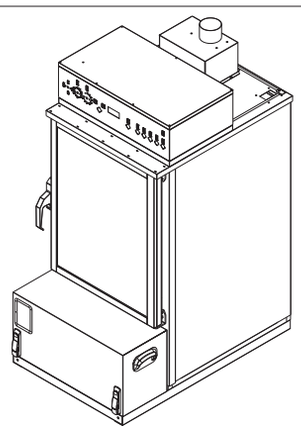

OFK.06 Trailer Field Kitchen is equipped with a Convection Oven. Convection Ovens cooking chamber is manufactured from high quality stainless steel with deep drawing method for ensuring easy use and obtaining the highest hygiene standard. The chamber has a nominal capacity of 150 liters with the possibility to inset 10 gastronom trays GN 1/1 40mm. Oven front door is manufactured from double wall glass resistant to high temperature.

Estimated Weight	270 kg
Dimensions	1060 mm x 690 mm x 1500 mm
Pot Dimensions	550 mm x 750 mm x 400 mm
Volumetric Capacity	150 liters
Purposive Capacity	10 pcs. GN 1/1 40
Steaming Temperature	100°C
Dry Cooking Temperature	50°C - 250°C
Combi Cooking Temperature	50°C - 250°C

Triple layer used in the multifunctional cooking unit



- Even heat distribution on the cooking surface
- Rapid heat up
- High efficient
- Time and energy saver

Diesel Fuel Burner



Burners are working with atomizing of the fuel to achieve maximum efficiency and minimum fuel consumption.
Electric is only used for controlling the ignition, the fuel pump and the air ventilation fan. Electric consumption is less than 500 watts which can be covered whether by 24V DC feeding or 220 V AC feeding.

Fuel tank capacity	4,5 liters
Power	18 kW
Power supply	230 V / 50 Hz or 24 V DC

Water Pump

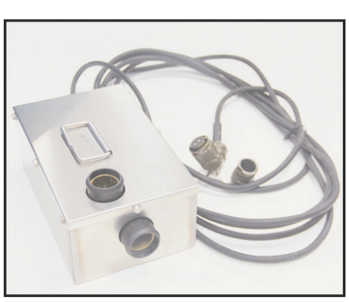

A high efficiency and lightweight water pump is used to provide fresh water from water sources for cooking or general purposes such as cleaning.

The pump has flow rate of 5000 liters per hour at 0.2 bar.

Fire Extinguisher



In case of fire it provides self protection.

Generator



Field Kitchens with liquid fuel constantly need pressurized air. In order to meet the pressurized air requirement, a generator is supplied with mobile kitchen.

Engine Type	4-Stroke Diesel
Cooling System	Air Cooled
Oil Storage Capacity	1.75 lt.
Alternator Type	Monophase
Continuous Voltage	230 V
Continuous Frequency	50 Hz.
Continuous Current	30.4 AMP.
Continuous Output	7 kVA
Max. Output	7.5 kVA
Fuel Consumption	2.32-2.4 l / h
Ext. Dimension(L x W x H)	865 x 598 x 650 mm.
Total Weight	120-145 kg.
Fuel Tank Capacity	16 lt.

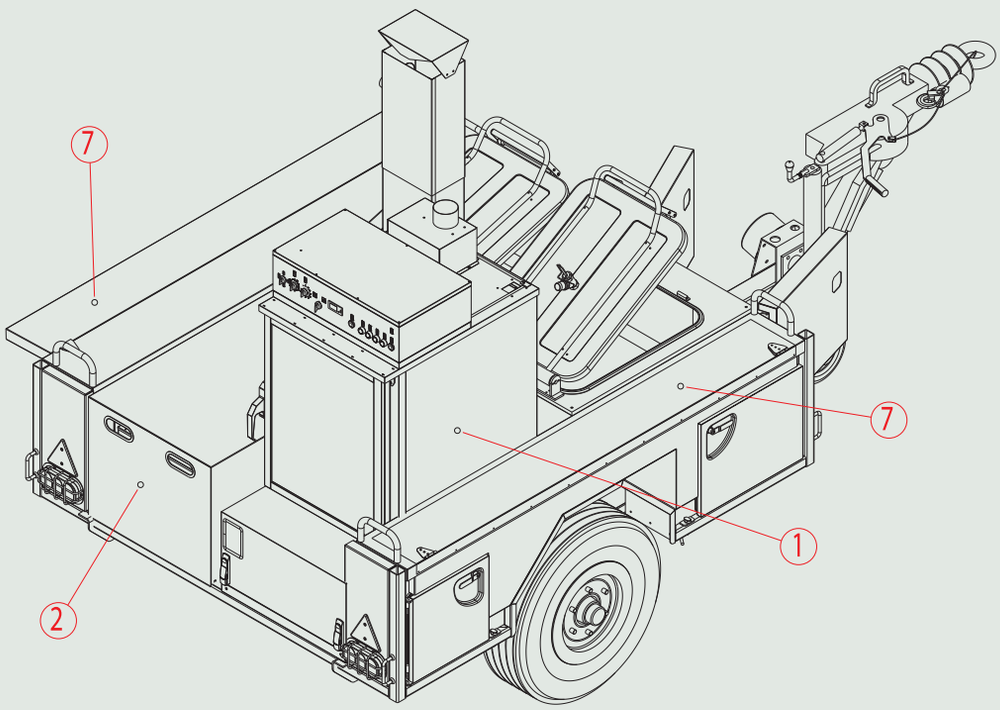

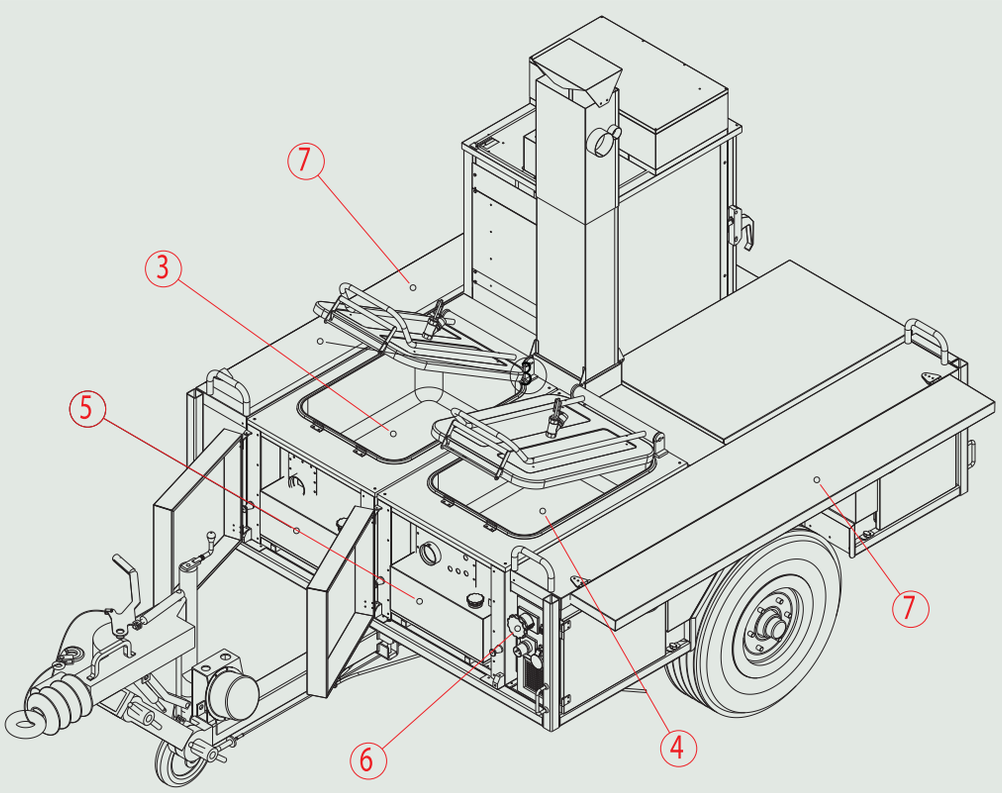

1-CONVECTION OVEN
2-MULTI FUCTIONAL UNIT
3-SINGLE WALL COOKING POT
4-DOUBLE WALL COOKING POT
5-BURNERS
6-ELECTRICAL CONTROL PANEL
7-WORKING BENCH

OFK 06 V2 Modular — Field Kitchen

Complete meal for 300 persons is ready in 2 hours!



Technical Data:

Model No:	OFK 06 V2

Dimensions and Weight:

Dimensions-awnings closed	3840 mm x 2240 mm x 2650 mm
Dimensions-awnings open	5250 mm x 4620 mm x 2650 mm
Ground Clearance	300 mm
Estimated Weight	2.360 kg

Chassis with frame:

Overrunning brake with automatic back-up lock	
Towbar height, adjustable	550-1050 mm
Retractable support wheel	1
Single Rubber Torsion Axle	1
Gross Trailer Weight	2.600
Coupling NATO	-76.2mm x 41.2 mm

Tyres

Wheel Rims	6,75 x 17,5
Tires	235 x 75 x R17,5

Cooking Unit	Meal Specialty	Cooking Time	Cooking Capacity	Portion Size
Double Wall Cooking Pot	Soup	60 min	200 person	200 - 250 gr
	Rice	45 min	200 person	300 gr
	Hotplate	It depends on the specialty of food		
Single Wall Cooking Unit	Soup	60 min	200 person	200 - 250 gr
	Rice	60 min	200 person	300 gr
	Hotplate	It depends on the specialty of food		
Single Wall Cooking Unit	Soup	60 min	100 person	200 - 250 gr
	Rice	60 min	100 person	300 gr
	Hotplate	It depends on the specialty of food		
Frying Pan	Fried Vegetable	30 min	75 person	70 - 80 gr
	Fried Meat	30-60 min	75 person	200 gr

COOKING EQUIPMENT	
DOUBLE WALL COOKING POT	1
SINGLE WALL COOKING UNIT	2
MULTIFUNCTIONAL COOKING UNIT	1
DIESEL BURNER	4

ADD-ONS	
WORKING TABLE / BENCH	S
WEATHER PROTECTION (PVC TARPAULIN)	O
COTTON FAT-ABSORBING FLEECE	O

S: Standard O: Optional

Standard Features

The OFK.06 V2 Modular kitchen cooking equipments can be operated individually or as a complete kitchen line providing the caterer with great flexibility in the field. The cooking modules are mounted on the trailer so that they can be transported quickly and easily to the operation site. OFK.06 V2 is operated by means of the OZTI new generation diesel burner. OFK.06 V2 can be deployed to support feeding requirements in disaster areas or military operations.

Double Wall Cooking Pot



OFK.06 V2 is equipped with a double wall pressure cooking pot of 150 liters capacity. Double wall pressure cooking pot can work either on its place over the trailer or standing alone on its special leg construction.Inner pot is made of deep drawing high quality stainless steel, and provides stability against pressure and highest hygiene standard outer walls of the pot are such welded to deep drawn inner pot not to allow any steam leakage Hot steam obtained by heating the innerjacket water and heat is distributed homogenously within this hot steam. This advanced kitchen equipment provides modern cooking technics from biological cooking to roasting.

Estimated Weight	175 kg
Dimensions-legs open	1100 mm x 700 mm x 950 mm
Inner Pot Dimensions	550 mm x 750 mm x 370 mm
Volumetric Capacity	150 liters
Purposive Capacity	120 liters

Single Wall Cooking Unit



OFK.06 V2 is equipped with a single wall cooking unit with 150 liters capacity for traditional cookings. This unit is made of deep drawing high quality stainless steel, and provides stability against pressure and highest hygiene standard.

Estimated Weight	145 kg
Dimensions-legs open	1100 mm x 700 mm x 950 mm
Pot Dimensions	550 mm x 750 mm x 370 mm
Volumetric Capacity	150 liters
Purposive Capacity	120 liters

Single Wall Cooking Unit



OFK.06 V2 is equipped with a single wall kettle pot with 100 liters capacity for traditional cookings. This unit is made of high quality stainless steel, and provides stability against pressure and highest hygiene standard.

Estimated Weight	125 kg
Dimensions-legs open	1100 mm x 700 mm x 950 mm
Pot Dimensions	550 mm x 750 mm x 260 mm
Volumetric Capacity	100 liters
Purposive Capacity	85 liters

Frying Pans with "Triple layer bottom"



The triple layer material at the bottom of frying pan provides even heat distribution across entire cooking surface. Frying pans are made of AISI 304 CrNi stainless steel.

Estimated Weight	105 kg
Dimensions-legs open	1100 mm x 700 mm x 950 mm
Pot Dimensions	550 mm x 750 mm x 130 mm
Volumetric Capacity	50 liters

Diesel Fuel Burner



Burners are working with atomizing of the fuel to achieve maximum efficiency and minimum fuel consumption.
Electric is only used for controlling the ignition, the fuel pump and the air ventilation fan. Electric consumption is less than 500 watts which can be covered whether by 24V DC feeding or 220 V AC feeding.

Fuel tank capacity	4,5 liters
Power	18 kW
Power supply	230 V / 50 Hz or 24 V DC

Water Pump



A high efficiency and lightweight water pump is used to provide fresh water from water sources for cooking or general purposes such as cleaning.

The pump has flow rate of 5000 liters per hour at 0.2 bar.

Fire Extinguisher



In case of fire it provides self protection.

Generator



Field Kitchens with liquid fuel constantly need pressurized air. In order to meet the pressurized air requirement, a generator is supplied with mobile kitchen.

Engine Type	4-Stroke Diesel
Cooling System	Air Cooled
Oil Storage Capacity	1.75 lt.
Alternator Type	Monophase
Continuous Voltage	230 V
Continuous Frequency	50 Hz.
Continuous Current	30.4 AMP.
Continuous Output	7 kVA
Max. Output	7.5 kVA
Fuel Consumption	2.32-2.4 l / h
Ext. Dimension(L x W x H)	865 x 598 x 650 mm.
Total Weight	120-145 kg.
Fuel Tank Capacity	16 lt.

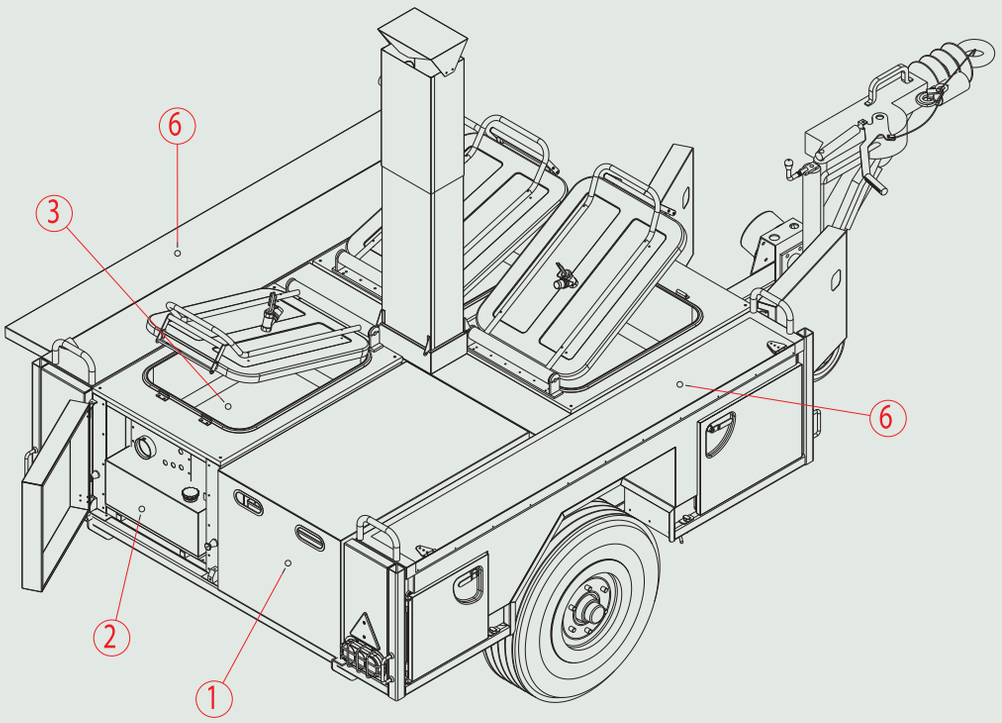

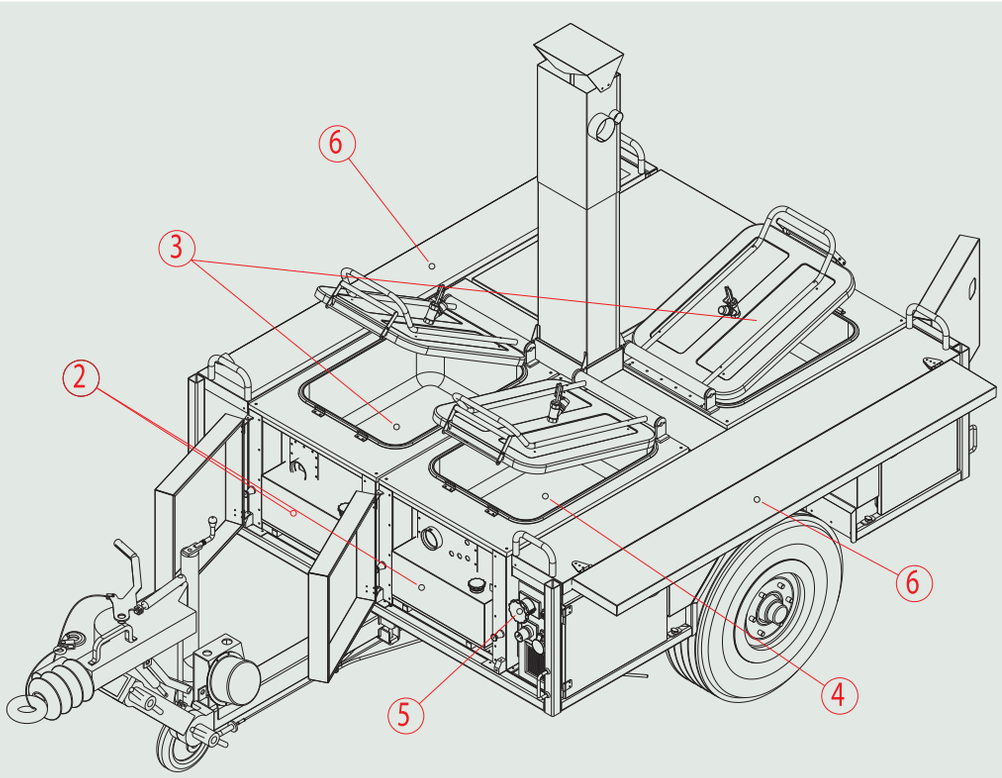

1-MULTI FUCTIONAL UNIT
2-BURNER
3-SINGLE WALL COOKING POT
4-DOUBLE WALL COOKING POT
5-ELECTRICAL CONTROL PANEL
6-WORKING BENCH

Ozti Portable Cooking Module

OZTI PORTABLE COOKING MODULE
THE PORTABLE COOKING MODULE is designed to meet the needs of meal of the troops, groups and community on temporary field duties.

THE PORTABLE COOKING MODULE consists of 3 (three) cooking reservoirs and one burner unit. Each cooking reservoir has a capacity of 16 liters.

The Portable Cooking Module can be safely transported by land, air and sea transportation vehicles by the help of appropriate equipment.



Below is the cooking performance table of the Portable Cooking Module for 40 persons.

COOKING RESERVOIR	TYPE OF MEAL	COOKING TIME (MINUTE)	COOKING CAPACITY	RAW WEIGHT	COOKED WEIGHT	USED WATERS
1.RESERVOIR	RICE	45	40 PERSONS	4 kg.	11 kg.	7 LITERS
2.RESERVOIR	MEAT	65	40 PERSONS	8 kg.	6 kg.	1 LITERS
3.RESERVOIR	SOUP	65	40 PERSONS	3 kg. Lentil	13 kg.	10 LITERS

Water in the first reservoir reaches the boiling point (100°C) at the 25th minute.



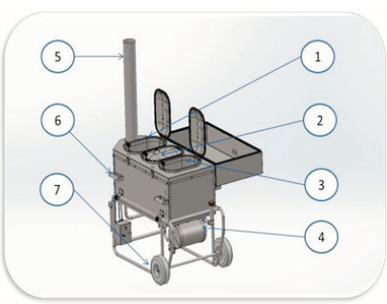

1. Cooking reservoir.
2. Cooking reservoir.
3. Cooking reservoir.
4.Fuel tank.(DIESEL)
5.Cooking module chimney.
6.Carrying handle.
7.Cooking module wheels.



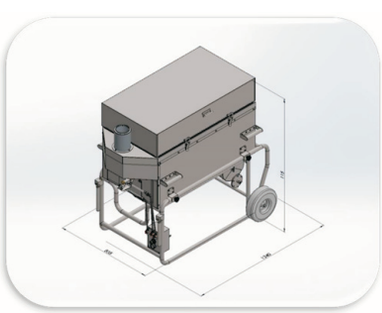

Length :1240 mm
Width :815 mm
High :1150 mm
Weigth :120 kg



Bistro (Small Restaurant) in a Train

To provide passengers on the move with some thing to eat and drink in a small but lovely and practical cafe&bar, some inter city and international trains come with a small restaurant(Bistro) with table service or take away in a dining car .Hot and cold snacks and drinks are served in this bistro area.
Stainless Steel is used for this project because it has long been the first choice of producers, designers and users of cookware because of the fact it does not stain, chip or rust. It is robust and does not affect the flavour of the food, easy cleaning maintenance makes it the first choice for the strict hygiene conditions. Stainless steel's bright, easily maintained surface provides a modern look and attractive appearance.



Equipment

- Electrical cabinet
- Place for cash register
- Hot plate
- Oven
- Tea maker (12 litres)
- Toast-griller (usable by pressing)
- Exhaust air suction system located above tea maker and toaster
- Sinks, one in the kitchen area and one in the bar area
- Dishwasher.
- Water tank 600 litres
- Refrigerators one under the showcase in the bar area , one in the bistro area
- Freezer refrigerated cabinets to contain food trolleys
- Kitchen bench
- Distribution bench (counter)
- Service table and sidewall table waste baskets inside the bistro
- Food waste disposer, positioned under the kitchen sink
- Cupboards and shelves to store dishes, glasses, mugs
- Drawers for forks, knives, spoons, etc.
- Food trolleys to serve passengers power sockets small wardrobe for the bistro personnel
- Locker for documents
- Place for portable fire extinguisher
- Draining floor inside the kitchen area
- Showcase (refrigerated display cabinet)
- Water piping connecting the washbasins, the dishwasher, the water tank and the floor drainages to the interface flanges/bushes attached on the carbody frame
- UV lamp for water treatment unit
- Water pump
- Sliding door and panel
- Waste water tank 700 liters
- 10 bar stools at bistro area
- Partition walls (partition walls from floor to the roof between corridor and kitchen area, between kitchen area and bar area).

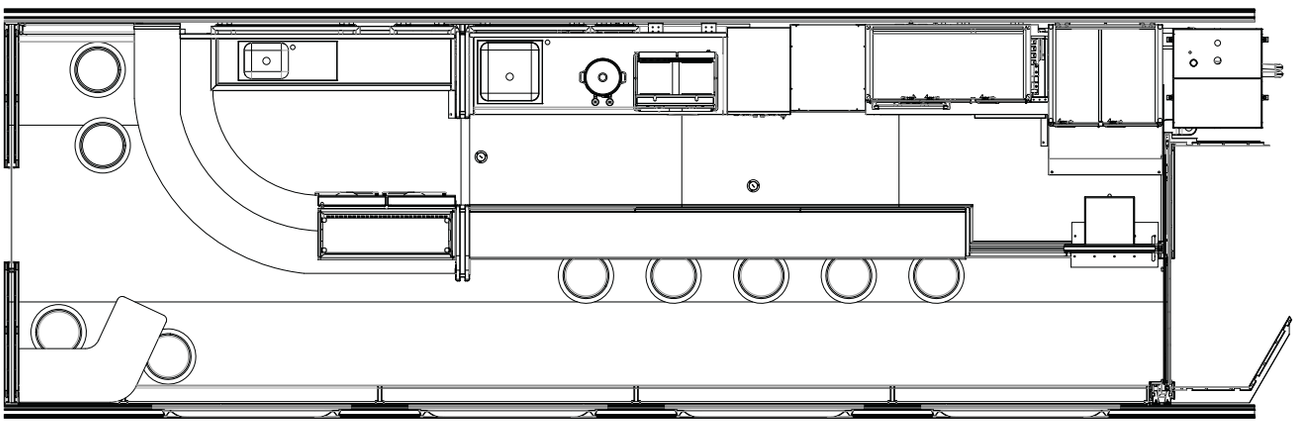

Working surfaces and kitchen utensils made of materials which comply with all the rules of hygiene. Absolutely smooth surface and easy to clean. Working surfaces made of stainless steel and the other surfaces made of laminated panels.





The equipment can be easily disassembled or replaced.
All the equipment susceptible to loose water or liquid connected to the draining floor or their own collecting tub.

Stainless steel cupboards and shelves to store dishes, glasses, mugs.
Aluminium alloy food trolleys for rolling stock application
Trolleys equipped to serve fast food and beverage during the running phase.



Draining Floor

Floating, draining, non-slip and waterproof floor inside the service area.

-the composite panels
-the resilient mounts
-the rubber mat covering
-the water drainage fittings
-screws and fastening elements
-interface components with the floor and with the bottom part of the equipment.

Waste Water Tank with the capacity of ca. 700 liters
Electrical Cabinet
Inside the bistro area an electrical cabinet equipped with all the necessary electrical switches to protect the bistro equipment, with warning lamps, with transparent front door . Made of stainless steel. All the necessary items to manage the Bistro loads, such as circuit breakers, terminals, contactors, etc.
Earthing
For protective provisions relating to electrical hazards on railway vehicles EN 50153 standard is valid
Noise, Vibration and Shock
All equipment shall be comply with EN61373 requirments.

Designed, assembled and tested according to the :
European Standards: TSI, EN;
International standards: UIC; ISO; IEC;



RUSSIAN REGISTER РУССКИЙ РЕГИСТР

13-000096

CERTIFICATE

awarded to

ÖZTİRYAKİLER MADENİ EŞYA SAN.VE TİC.A.Ş
CUMHURİYET MAH.HADIMKÖY YOLU CAD. NO:8
34500, İSTANBUL
Turkey

Certification Association "Russian Register"

confirms, as an IRIS approved certification body, that the Management System of the above organization has been assessed and found to be in accordance with the

International Railway Industry Standard (IRIS)
Revision 02, June 2009

for the activities of Design and Development and Manufacturing
for the scope of certification: 8 (Interiors)
as Bistro/Catering Equipment

Certificate valid from: 07/08/2017

Certificate valid until: 02/08/2020*

IRIS Certification

Current date: 08/08/2017
Certificate-Register-No: 17.1223.026

* Providing that the subsequent surveillance audits are successful before the validity date of the previous audit.
Certification body address: 45/8 A, office 6N, Liteynyi prospect, 191014 Saint Petersburg, Russian Federation

©2017 UNIFE. All rights reserved.
1/1

SERTİFİKA/*CERTIFICATE*

GIDA GÜVENLİĞİ YÖNETİMİ
FOOD SAFETY MANAGEMENT

ÖZTİRYAKİLER MADENİ EŞYA SAN. VE TİC. A.Ş.

kuruluşunun,
company,

Cumhuriyet Mah. Hadımköy Yolu Cad. No:8 Büyükçekmece / İstanbul / Türkiye

adresinde,
at address,

OTEL, RESTORAN,CAFE, FAST FOOD, BAR, PASTANE, HASTANE, FABRİKA VE YEMEK ÜRETİM FİRMALARINDA KULLANILAN MUTFAK EKİPMANLARI VE CİHAZLAR, SEYYAR SAHRA MUTFAKLARI, ASSKERİ MUTFAK VE SERVİS ÜNİTELERİ, GEMİ MUTFAĞI EKİPMANLARI, MOBİL SU ARITMA SİSTEMLERİ, MOBİL SIHHİ SİSTEMLERİ, ASKERİ MUTFAK VE HİZMET ÜNİTELERİ, STANDART TİP KONTEYNIRLAR VE KONTEYNER ÜZERİNE KURULU MUTFAK SİSTEMLERİ,ÇAMAŞIRHANE ÜNİTELERİ, EKMEK FIRINLARI, MUHTELİF AMAÇLI DESTEK ÜNİTELERİ, SOĞUTUCU ÜNİTELER, GAZLI ELEKTRİKLİ BASINÇLI VE NÖTR PİŞİRME,MUHAFAZA VE TAŞIMA CİHAZ ÜNİTELERİ, ÇALIŞMA TEZGAHLARI, DOLAP, SERVİS-TEŞHİR ÜNİTELERİ VE DAVLUMBAZLARIN TASARIMI, ÜRETİMİ SATIŞI VE SATIŞ SONRASI HİZMETLERİNİN SUNUMU

DESIGN, PRODUCTION, SALES AND AFTER SALES SERVICES OF HOTEL, RESTAURANT, CAFE, FAST FOOD, BAR, PATISSERIE, HOSPITAL, FACTORY AND CATERING KITCHEN EQUIPMENT, MOBILE FIELD KITCHENS, MILITARY KITCHEN AND SERVICE UNITS, MARINE KITCHEN EQUIPMENT, MOBILE WATER PURIFICATIONS SYSTEMS, MOBILE SANITARY SYSTEMS, MILITARY KITCHEN AND SERVICES UNITS, STANDART TYPE CONTAINERS, AND KITCHEN, LAUNDRY, BAKERY, COLD UNITS VARIOUS SUPPORT SYSTEMS, AS ASSEMBLED INTO THE CONTAINER , GAS-ELECTRICAL-PRESSURE AND NEUTRAL COOKING, STORAGE AND TRANSPORTING EQUIPMENT, WORKING BENCHES, SERVICES-DISPLAY UNITS, HOODS.

Kategori 3 (1) kapsamında,
at scope category 3 (1)

gıda güvenliği yönetim sistemi yürürlüğe koyduğu,
perform the food safety management system,

ISO 22000: 2005

standart taleplerinin yerine getirildiği belirlenmiştir.
the complete of the standard was determined.

İlk Yayın Tarihi	/ *Date First Registered*	: 23.04.2018
Yayın Tarihi	/ *Date Certificate Issued*	: 23.04.2018
Geçerlilik Periyodu	/ *Period of Registration*	: 3 Yıl / *Years*
Geçerlilik Tarihi	/ *Date Certificate Expires*	: 22.04.2019
Sertifika Numarası	/ *Certificate No*	: 03/12411/01

Onay: Approver

TÜRKAK
Gıda Güvenliği YS
TS EN ISO/IEC 17021
AB-0060-YS
TÜRKAK BDS NO
YS-8870-0576

Bu sertifikanın geçerliliği, yılda en az bir kez yapılacak gözetim denetiminin başarılı geçmesine bağlıdır. Bu durumda belge yeniden düzenlenecektir.
The Validity of this certificate, subject to successful completion of surveillance audit which will take place at least once a year. In this case, the document will be revised.

ASB Uluslararası Belgelendirme Gözetim Denetim ve Eğitim Hiz. Ltd. Şti. / *ASB International Certification Surveillance, Auditing and Training Services Ltd. Company*
Tatlısu Mh. Akif İnan Sk. Sevim Residance No:16 Daire:13 Kat:06 Ümraniye – İstanbul / TÜRKİYE Tel: +90 216 526 10 04 Fax: +90 216 526 30 91 e-mail: bilgi@asbcert.com
Bu sertifika, kuruluşun ASB'nin şartlarına uyduğu sürece geçerlidir. Sertifikanın durumu www.asbcert.com.tr adresinden kontrol edilebilir.
The Validity shall remain in force as long as the corporation follows instructions of ASB. Certificates status can be checked at www.asbcert.com.tr



ISO Containers

10FT - 20FT - 30FT - 40FT ISO Containers

Ozti recently completed a highly technical ISO Container production project. Our products range from standard 20' cargo containers to expandable and soft Wall special containers. Different - Special type ISO Containers are being produced as dry cargo container, storage container and as integrated systems. All of these containers can be tailored to meet your needs.



Some containerized applications include :

Kitchens,	Command Posts,
Dishwashing Facilities,	Operation Centres,
Bakeries,	Medical First Aid Stations
Cold Rooms,	Workshops,
Toilet& Showers,	Electronic Repair Facilities
Laundries,	

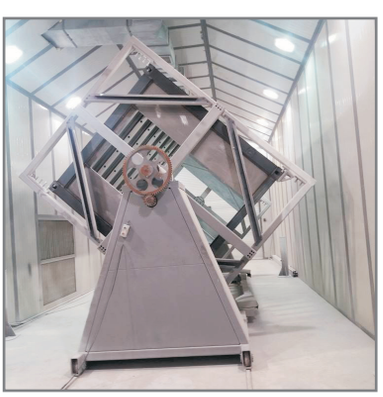

These containers are being tested and CSC CERTIFIED by our test systems in our factory. Contrary to the prefabricated containers, these containers can be handeled by craine, winch and fork lift .





Army containers are designed and built for military applications and emergency use :

Suitable for air, land and sea transport	Half-height
With side doors and/ or end doors	Low height
Double wing door	High cube
Painted in different colour shades and finishing	CSC, UIC, TIR certification
Plywood floor	Intermodal transport and storage of dry bulk cargoes
Steel floor	



The Know-how acquired during 60 years of activity enables us to provide customized, on-demand solutions, also according to the specific needs of the customer.
All units are manufactured in Turkey in order to ensure reduced times of preparation and high standards of quality.
TS ISO 1496-1 Series 1 Freight containers- Specifications and testing
TS 1359 EN ISO 6346 Freight containers- Coding, identification and marking
TS ISO 668 Series 1 Freight containers- Classification, dimensions and ratings





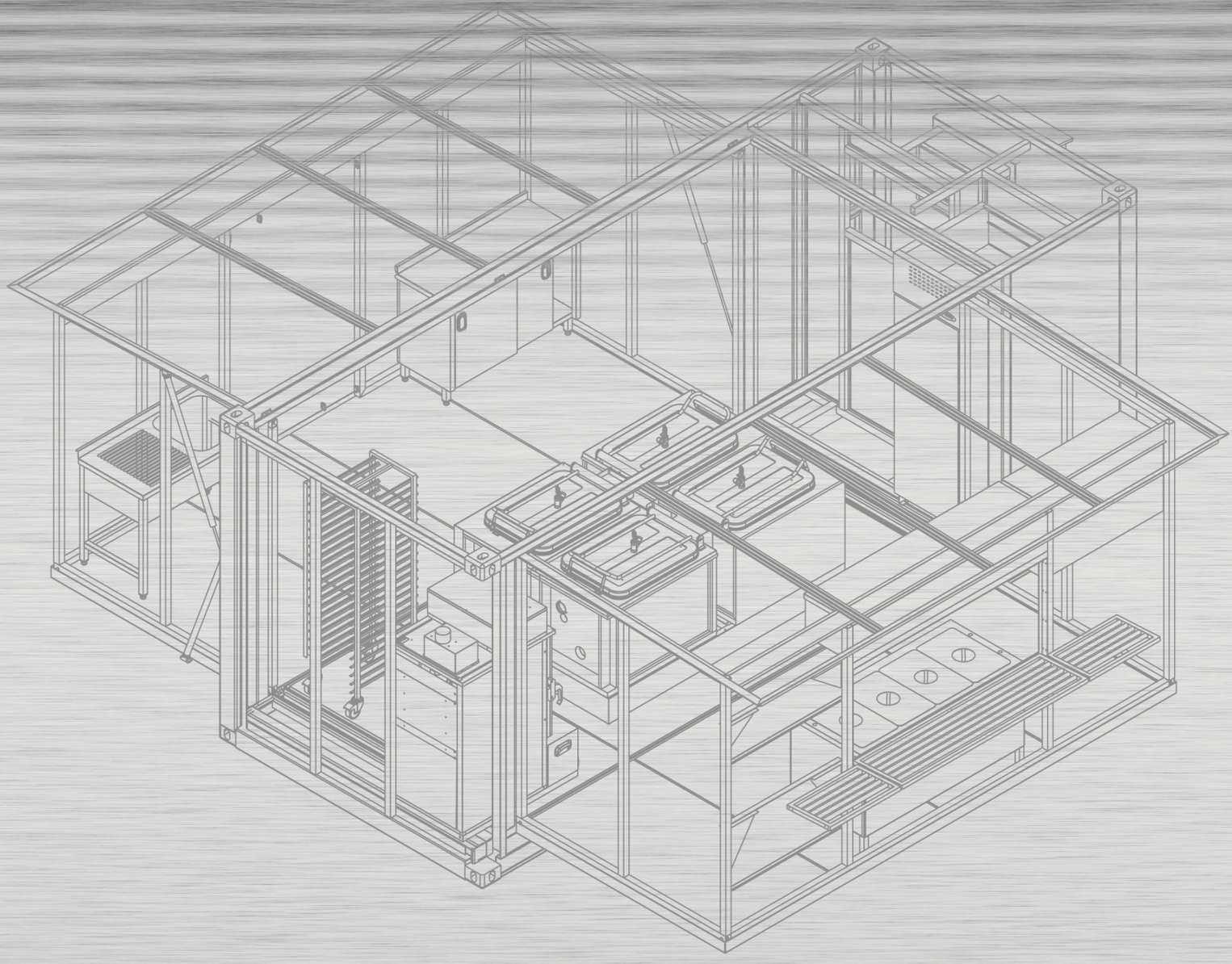

Containerized Kitchen

The single most important weapon in a modern army is the properly motivated solider. It is imperative, therefore, that soldier maintain optimum cognitive and physical performance in order to constantly transition between peacekeeping missions, combat preparation, and intense combat operations.
Fueling the soldier is essential to these activities, and it is one of the most important factors in soldier health, morale and welfare. As important as it is to consistently deliver high quality, highly acceptable rations to Soldiers, it is equally as imperative for troops to have the equipment they need to prepare and serve those rations. OZTI container kitchen provides soldiers the capability to enjoy hot group meals in combat or training environments. The unit is designed for the food preparation, cooking and food service with different configurations according to the required capacity. It is usually built up in a Standard 20' ISO container but it can be also designed in an expandable container or 40' ISO Container for larger capacity.
Ozti container-based solutions can be adapted to meet any military requirements, as well as the needs of civilian users such as construction & oil companies and civilian aid organizations. It is tailor-made for rapid deployment and relocation.

20' Container Kitchen

If space is an issue or it is a smaller operation, OZTI 20' Container Kitchen is a great starting point. It will give you full operation whilst maximizing your space. OZTI 20' Container Kitchen serves for the preparation, cooking and distribution of 150-300 meals three times per day and washing of tableware in field conditions. The kitchen can be designed with different configuration according to the required capacity.
The power is supplied by diesel fuel generator which can be integrated in the technical room. Diesel fueled cooking units are optional.
OZTI 20' Container Kitchen is built with state of the art equipment and structurally very durable. The container feature CSC certification label and can be transported on vehicles equipped for transporting ISO containers.
The inner shell and ceiling of the OZTI 20' Container Kitchen are made up of thick thermal insulation panels comprised of a layer of polyurethane foam sandwiched between stainless steel sheets.

OZTI 20' Container Kitchen can be furnished with service window for food distribution. It is also equipped with one air-conditioning unit to secure an optimum climatic condition inside the kitchen. Optional lifting supports can be mounted on the corners of the container for lifting and lowering of the container kitchen from and onto the transport vehicle.

20' Container Kitchen With Jack



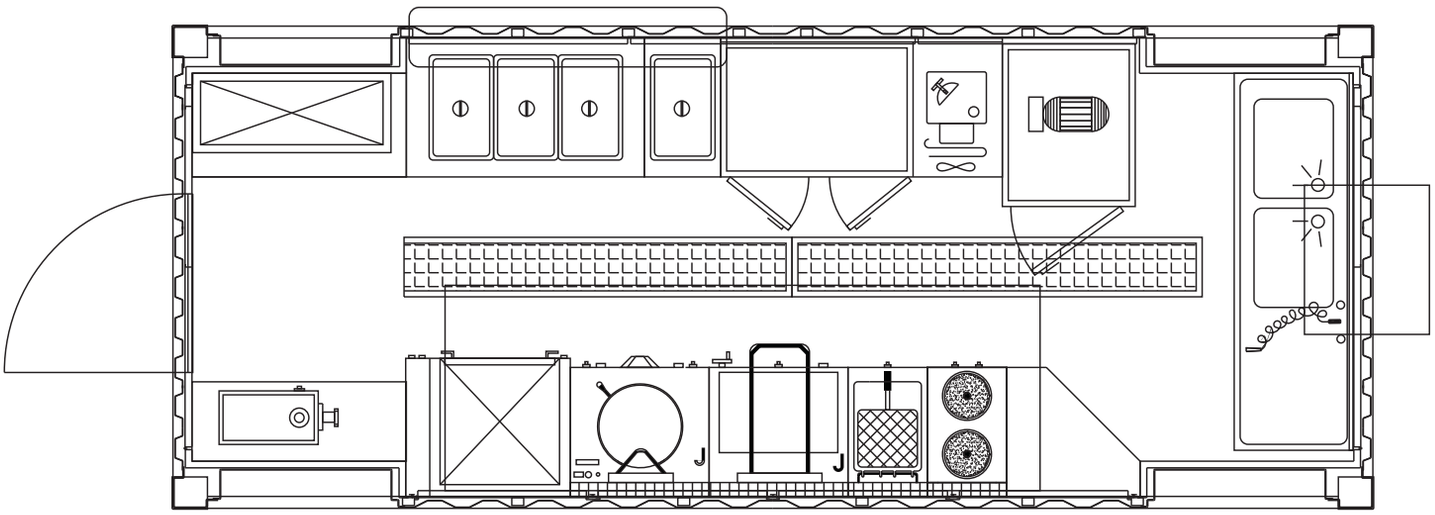

KITCHEN EQUIPMENT			
Combi Oven	Electrical Cooker	Hot Service Unit	Ac Unit
Indirect Boiling Pan	Single Fryer	Vegetable Cutting Machine	Ventilation Fans
Tilting Bratt Pan	Service Window	Meat Mincing Machine	





External view of container

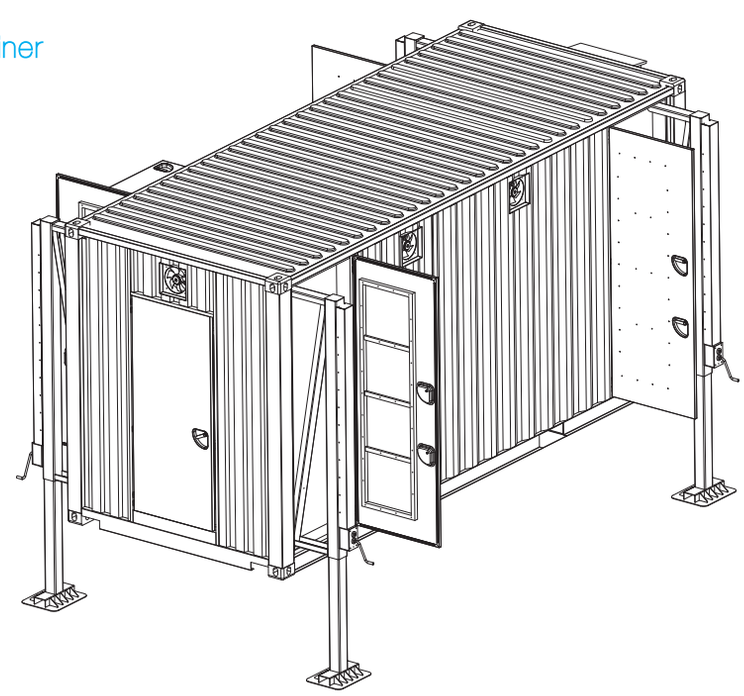

20' Container Kitchen Without Jack



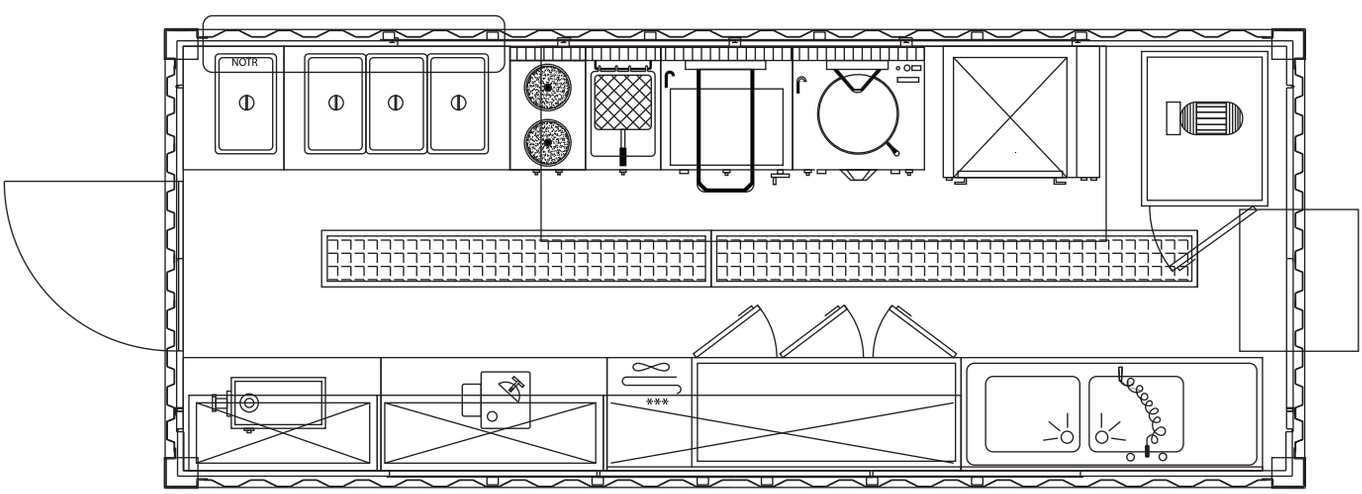

KITCHEN EQUIPMENT			
Combi Oven	Electrical Cooker	Hot Service Unit	Ac Unit
Indirect Boiling Pan	Single Fryer	Vegetable Cutting Machine	Ventilation Fans
Tilting Bratt Pan	Service Window	Meat Mincing Machine	





External view of container

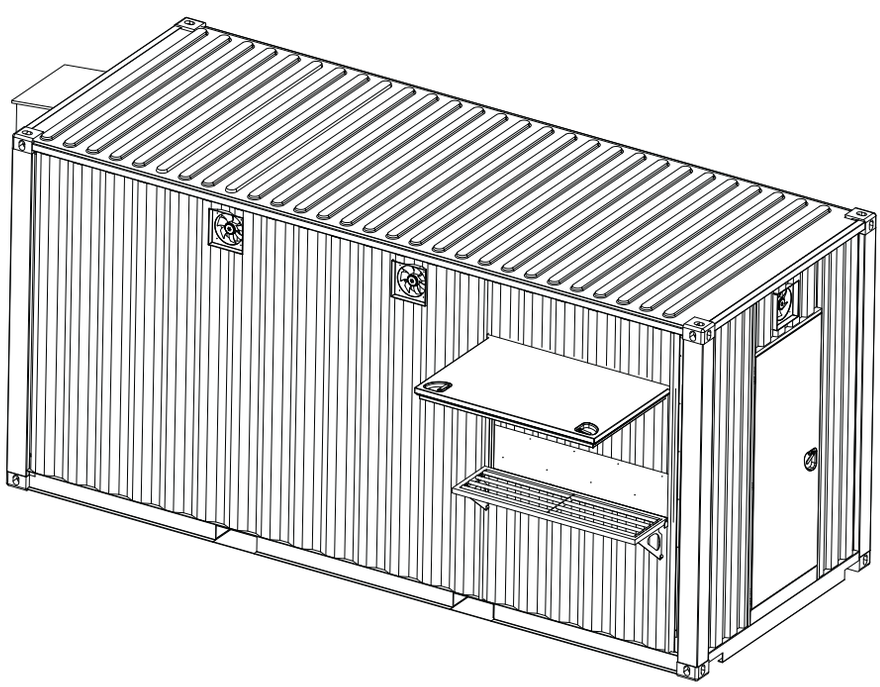

40' Container Kitchen



The robust OZTI 40' Container Kitchen will give you maximum output, having all the key equipment you need to run a professional kitchen anywhere. It is designed for the food preparation, cooking and food service.

Equipped with state of the art equipment, this Kitchen can be connected to one another in order to serve up to 1000 personnel. Connection openings are created on the side walls and they are closed during transportation or storage.

Preparation, cooking and food service can be designed in different containers to extend the capacity for very large numbers of people. The inner shell and ceiling of the OZTI 40' Container Kitchen are made up of thick thermal insulation panels comprised of a layer of polyurethane foam sandwiched between stainless steel sheets. All the interior walls, ceiling and floor are clad in stainless steel to ensure compliance with the strictest hygiene requirements. It includes also hot and cold running water for food preparation and clean up, environmental controls for heating and cooling, integrated ventilation for cooking, and refrigerated storage. The power is supplied by diesel fuel generator. Diesel fueled cooking units are optional.

The container feature CSC certification label and can be transported on vehicles equipped for transporting ISO containers. Optional lifting supports can be mounted on the corners of the container for lifting and lowering of the container kitchen from and onto the transport vehicle.





Expandable Diesel Container Kitchen



OZTI three-in-one expandable container kitchen is equal to a standard ISO 20?container in transport mode and three times larger than shipping footprint when it is deployed.
The container is equipped with all the technical solutions you can find in a typical catering kitchen.
Capable of supporting to 500 soldiers with three hot cook-prepared or heat and serve rations per day, the OZTI expandable container kitchen is designed for use at battalion-level meal preparation sites but can also be used by other selected units in remote locations.
It includes also hot and cold running water for food preparation and clean up, environmental controls for heating and cooling, integrated ventilation for cooking, and refrigerated storage.
OZTI expandable container kitchen is made for use under extreme climatic conditions. It is designed for use at temperatures ranging up to + 45 °C. Our containers are well insulated with best quality insulating material.

OZTI expandable container kitchen can be used a stand-alone unit or linked to a dining hall.
All the interior walls and the ceiling and floor are clad in stainless steel to ensure compliance with the strictest hygiene requirements under field conditions.
The complete kitchen is full electric powered and it is entirely autonomous with its own diesel powered generator. Having arrived on site OZTI CONTAINERIZED KITCHEN is ready for operation within the shortest time.
It is transportable on lorries, aircraft, train, ships and can be airlifted by helicopter
The power is supplied by diesel fuel generator which can be integrated in the technical room. Diesel fueled cooking units are optional.





"OCK 3in1" is a self-contained system for food preparation, cooking, warming and serving.

Preparation

"OCK 3in1" includes a refrigerator, working benches, several storage cabinets and a single bowl sink unit.

Cooking

"OCK 3in1" features a double-walled monoblock pressure boiling pan which provide a hygienic and effective catering solution. Boiling pan incorporates an evacuated jacket filled with water to ensure that food is evenly cooked and doesn't burn.
Other features of "OCK 3in1" include two pressure boiling pan with direct cooking system and one monoblock frying pan made from triple-layer material which ensure uniform heat distribution for safe and hygienic cooking. "OCK 3in1" also accommodates a combi oven for roasting, grilling, baking, stewing, poaching, reheating, and conserving.
All cooking modules are heated by separate diesel fuel burner which are designed for ease of use with "One Touch Starting System".

Distribution

"OCK 3in1" incorporates a hot food service counter for food distribution through service window. But also rations can be sent in insulated food containers to soldiers in remote areas

In addition, the "OCK 3in1" includes an electrical water heater and a water pump system for boosting and discharge .

The electrical needs of the "OCK 3in1"are provided by an on board tactically-quiet generator. In garrison, the kitchen can also be operated from an external electrical source.







Stainless Steel Gastronorm Size Refrigerator

Kitchen Equipment

Convection Oven	10 x 1/1 Tray, Core Temperature Control, 3 Different Cooking Methods
Double Wall Boiling Pan	150 Liters
Single Wall Boiling Pan	2 x 150 Liters
Frying Pan	Multilayer Bottom, 50 Liters
Hot Food Service Counter	Electrical, 4 x GN 1/1 capacity
Refrigerator	Gastronorm Size, 600 Liters capacity
Rack Trolley	GN 1/1 Size, 17 Trays
Working Table	1200 x 500 mm with cabinet
Sink Unit	1200 x 600 mm with cabinet
Wall Mounted Cupboards, Tables	

Technical Specifications of Container

Container Dimensions Transport	ISO 1C 20' container (6058 x 2438 x 2438 mm)
Container Dimension Operation	6058 x 6238 x 2438 mm
Expandable	3 in 1
Weight	8000 kg.
Transport	By lorries, aircraft, train, ships and can be airlifted by helicopter.
Operating Temperature	-32°C / + 60°C
Max. Altitude	3000 meters from sea level
Painting	According to Specs
Power Socket (From Net)	32 A - 230 V / 50 Hz IP65
Fuel Tank Capacity	100 L (Diesel Burners) + 100 L (Genset)
Generator Set	
Power Generator	15 kVA
Air Condition Unit	
Max. Cooling Capacity	4.9 kW
Heating Capacity	2 kW
Noise Level, 1 m Distance, step I/II	52/59 db

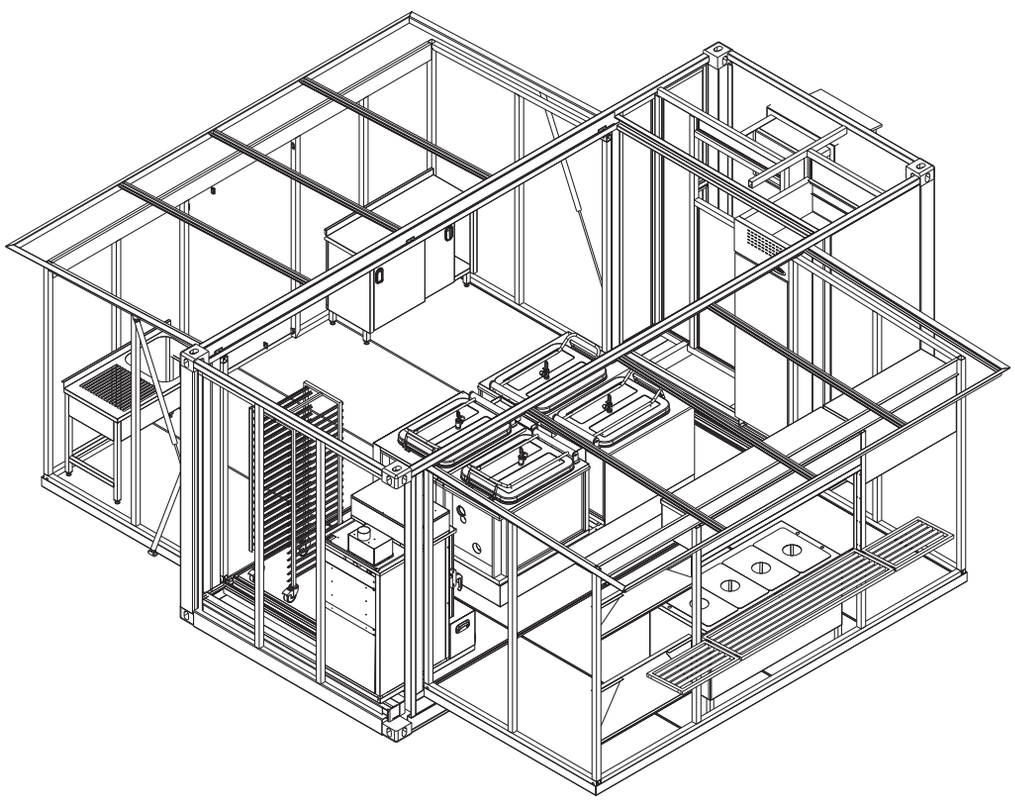



OCK3in1 can be deployed and get ready to operate in 30 minutes.

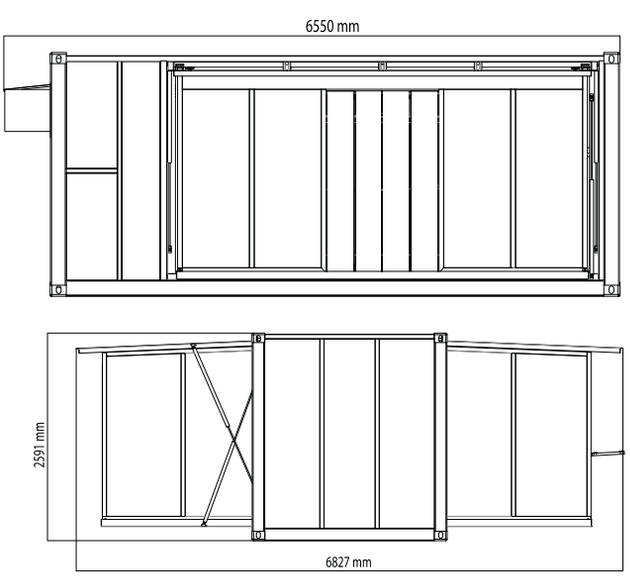

Expandable Electrical Container Kitchen



OZTI KITCHEN CONTAINER SYSTEM is designed to allow a quick and easy installation by civilian and military personnel as possible and equipped with miscellaneous equipment for this purpose.
The unit is designed for the food preparation,cooking and food service with different configurations according to the required capacity.VIP Container Kitchen serves fort he preparation,cooking and distribution of 150-300 meals three times per day in field conditions.The container feature CSC certification label and can be transported on vehicles equipped for transporting ISO containers.VIP container kitchen can be furnished with service window for food distribution.It is also equipped with one air-conditioning unit to secure an optimum climatic condition inside the kitchen.Optional lifting and lowering of the container for kitchen from and onto the transport vehicle.

• The Kitchen Container's preparation, storage and technical areas are designed in a 20" Container.

•The floor is covered with a 1.50 mm thickness stainless steel at the top that has good corrosion resistance.

• A stainless steel floor drain system is designed on the floors to remove the used water from the kitchen container.

• The VIP Kitchen Container is designed to meet all storage , food preparation and cooking needs of the users.

The Kitchen Container is enriched with Fryer ,Refrigerators and freezers,Tilting Bratt Pan,Hot Plates ,Meat Machines,Boilnig Pan, Electrical Doner Grill Machine,Vegetable Processing Machine,Oven,Grill Plate ,10 lt.Mixer ,Hamilton Blender and Convection Oven.

Kitchen Container has been designed to meet all your food preparation, storage and cooking needs.





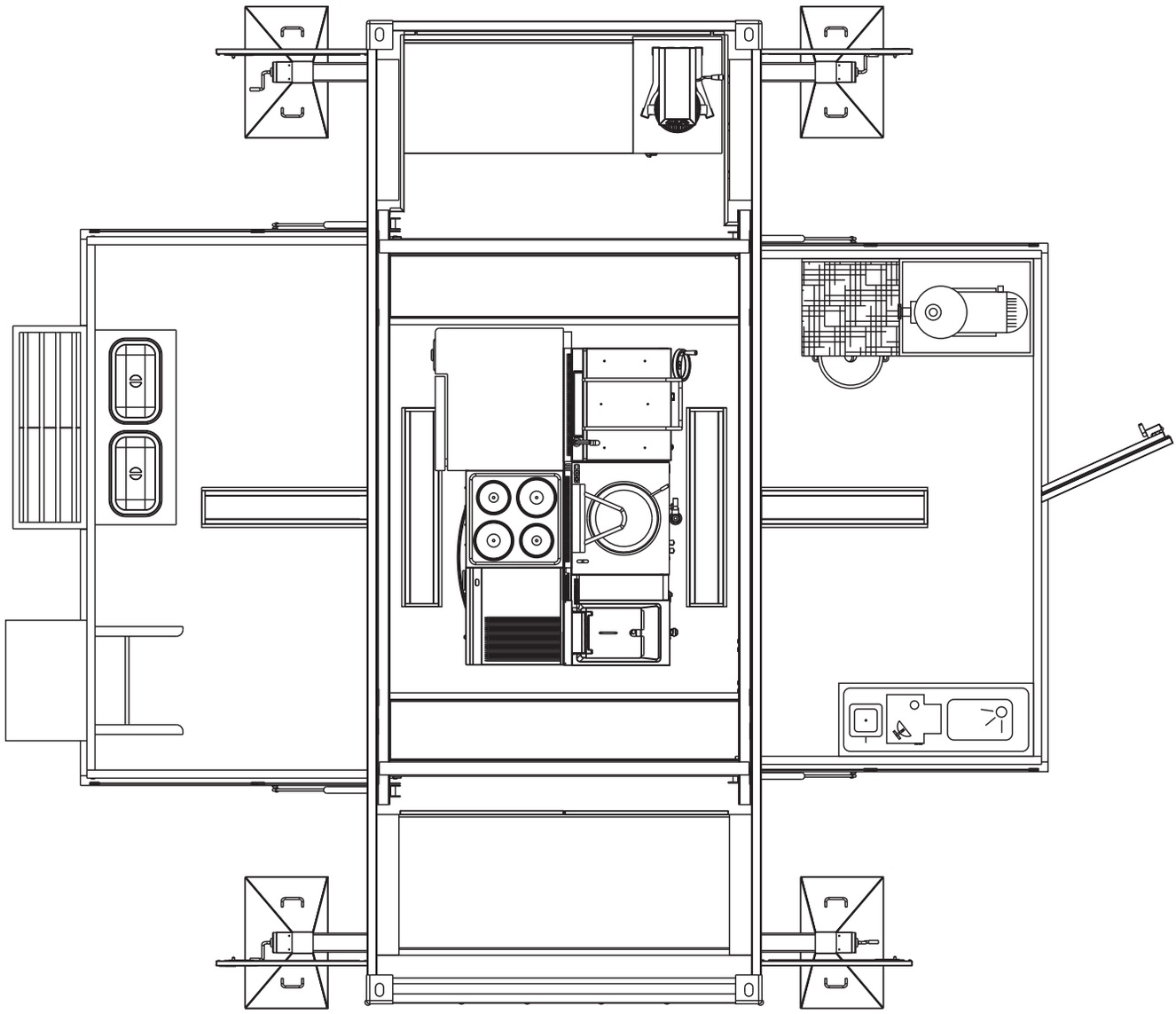

KITCHEN EQUIPMENT	
Meat Mincing Machine	Grill Plate (Electrical)
Electrical Döner Grill Machine	Refrigerator & Freezer
Boiling Pan (Electrical)	Hot Plates (Electrical)
Oven (Electrical)	Tilting Bratt Pan (Electrical)
Vegetable Processing Machine	Fryer (Electrical)
10 lt Mixer (Electrical)	Blender



The container feature CSC certification label and can be transported on vehicles equipped for transporting ISO containers.
The C130J is a sophisticated transport aircraft that is reputed for its ability to operate in challenging conditions and land in improvised airfields even in the dark.As you can see the picture ,VIP container kitchen can be transported by C 130J.

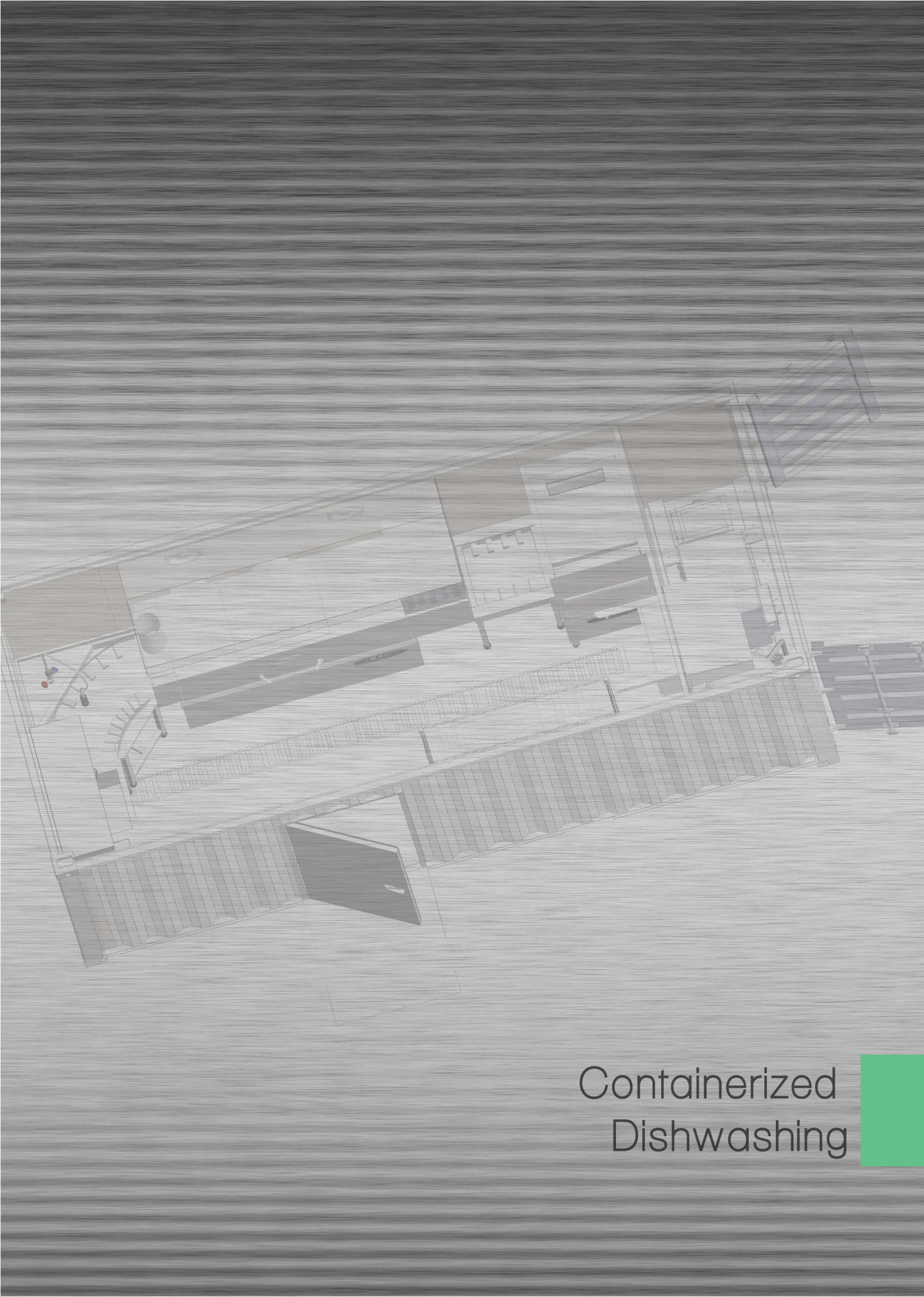

Containerized Dishwashing

20ft Containerized Dishwashing Unit 2000

20ft Containerized Dishwashing Unit is designed to meet military and civilian dishwashing needs on the field. Dishwashing equipment are installed into a 20 ft ISO container.
Inner walls, ceiling are made of stainless steel panels with insulation material to obtain maximum hygiene inside the kitchen. Floor is made of non-slippery pattern stainless steel sheets.
Container includes various components to serve: A conveyor type dish washer, utensil washer, diesel fuel water heater system, various conveyor benches, optional sink equipped with garbage disposal, water softening system to protect the machines, wall cupboard and wired shelf for storage purpose and an AC unit to climate inside of the container. Technical room contains a generator set to obtain autonomy.

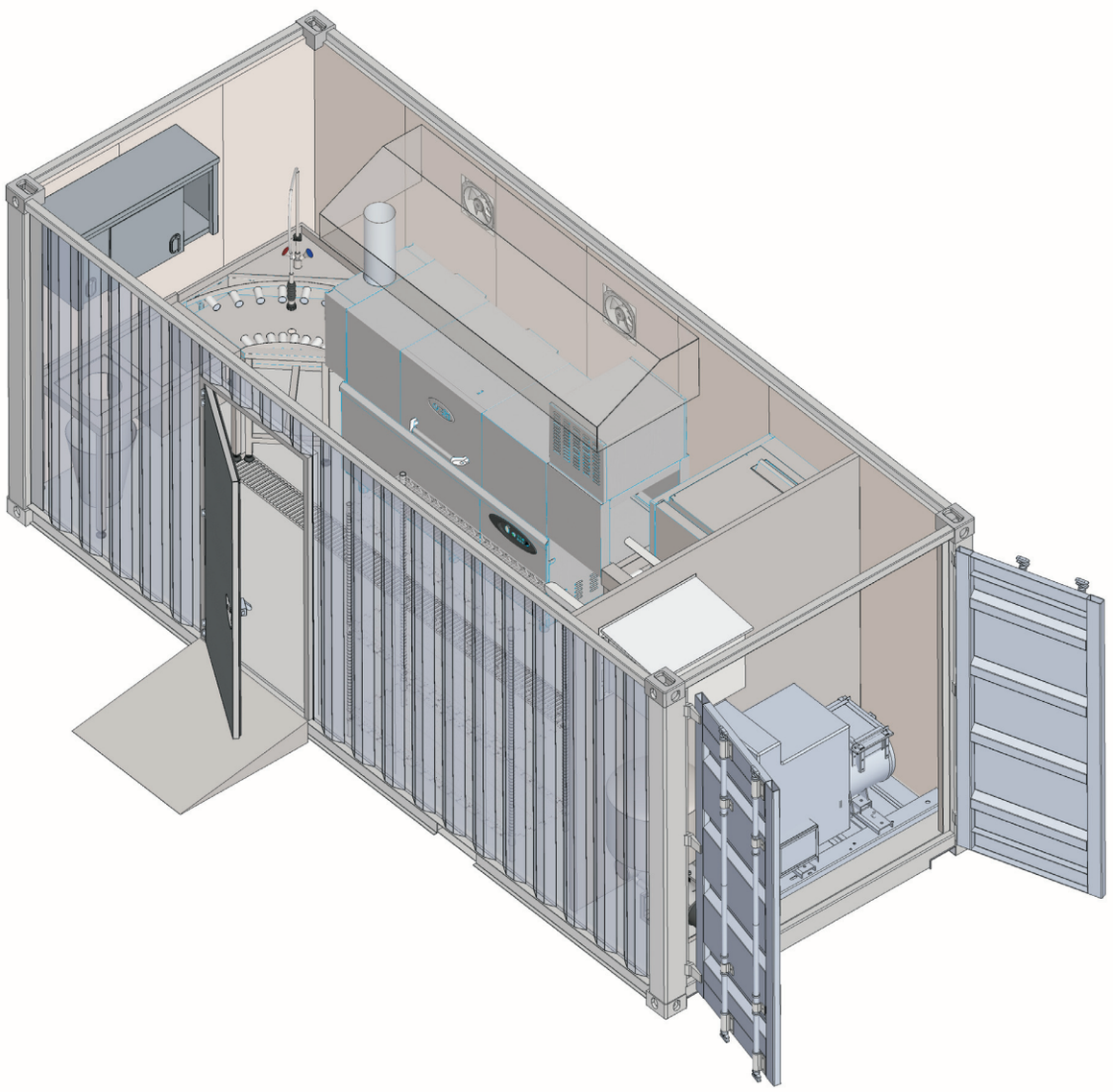

Units

(0710.000PW.00) [Utensil washer
Conveyor type dish washer] (kapasite: 2000 plate per hour
Storage shelf 7897.09060.14

Generator Set

Power	20 kVA (Prime)
Engine type	Diesel, four strokes, air cooling
Fuel consumption	6,1 liters per hour

Air Conditioner

Model	Dantherm AC-M5
Cooling capacity	4.7 kW maximum
Heating capacity	2.0 kW

Water Heating System

Diesel water heater	32 kW
Hot water tank	100 liters, made of stainless steel

Conveyor type dishwasher



- Stainless Steel Body incluting washing and boiler tank
- Hygenic washing tank
- 100 racks per hour (Rack dimension 50 x 50)
- Effective drying through a high powered fan
- 3 lt water consumption per cycle
- Automayic, user friendly control panel
- Continuous Washing through Conveyor System with dryer
- Saves energy, detergent and water
- Stainless steel washing arms
- Adjustable feet for height optimization
- Easy start up: one button to fill in and heat water in the boiler tank
- Electrical components and cabling according to international standarts and security regulations.
- Completely sealed to guarantee IPX5 water protection
- Thermostat-controlled rinse and washing temparature for efficient washing
- Non-return - Check valve System
- Washing temperature at 55-60°C (water supply at a minimum of 2 bar and 50°C)
- Rinsing temperature at 80-85°C (water supply at a minimum of 2 bar and 50°C)

Technical Features			
Code (right)	0710.02000.01	Washing pump power	1,5 kW
Code (left)	0710.02000.02	Rinsing pump power	0.37 kW
Electric Connection	400V~3NPE / 50Hz	Water inlet pressure / Temp.	2-4 Bar / 50 °C
Total rating	48 kW	Heat power (Washing/Rinsing)	9 / 27 kW
Washing capacity (plate/hr)	2000 plate (Max.)	Drying Fan Power	8 kW
Washing capacity (basket/hr)	133	Dirty water discharge con.	1 1/4 " (Ø 42 mm)
Washing / Boiler tank capacity	60 / 90 / 18 lt	Maximum noise	80 dBA
Washing program numbe	-	Gross weight	350 (±5) kg
Program times	-	Dimensions (LxWxD)	800x2550x1880 mm
Pre washing pump power	55-60°C	Protection class	IPX5
Washing water temp.	80-85 °C (max.)	Rack dimension	50 x 50 cm
Rinsing water temp.	3/4 "	Loading height	42 cm
Water inlet connection	0.72 kW	Inclination	6°

Utensil washer



- Stainless Steel Body
- Hygenic washing tank
- Gastronome 2/1 washing ability to featured
- 60 cm in diameter, cylinder-type pot to wash featured
- 4.5 l water consumption per cycle
- Easy to use electronic control panel
- 3 Selectable Washing Programmes
- Saves energy, detergent and water
- Stainless steel washing arms
- Adjustable feet for height optimization
- Easy start up: one button to fill in and heat water in the boiler tank
- Electrical components and cabling according to international standarts and security regulations.
- The potwasher is completely sealed to guarantee IPX5 water protection
- Thermostat-controlled rinse and washing temparature for efficientwashing
- Non-return - Check valve System
- Washing temperature at 55-60°C (water supply at a minimum of 2 bar and 50°C)
- Rinsing temperature at 80-85°C (water supply at a minimum of 2 bar and 50°C)

Technical Features			
Code	0710.000PW.00	Rinsing pump power	0.37 kW
Electric Connection	400V~3NPE / 50Hz	Water inlet pressure / Temp.	2-4 Bar / 50 °C
Total rating	16.7 kW	Heat power (Washing/Rinsing)	4,5 / 14 kW
Washing capacity (pan/hr)	600 tabldot (Max.)	Dirty water discharge con.	3/4 " (Ø 28 mm)
Washing capacity (basket/hr)	30/10/7,5	Maximum noise	80 dBA
Washing / Boiler tank capacity	65 / 18 lt	Gross weight	220 (±5) kg
Washing program number	3	Dimensions (LxWxD)	780x950x2040 mm
Program times	120/360/480	Protection class	IPX5
Washing water temp.	55-60°C	Rack dimension	60 x 70 cm
Rinsing water temp.	80-85 °C (max.)	Loading height	80 cm
Water inlet connection	3/4 "	Inclination	6°
Washing pump power	2.8 kW		



Refrigerated Container

Refrigerated Container

OZTI refrigerated containers are specially designed and developed for the cooling, freezing and storage of food. Units can be offered with different specifications and room sizes depending on the requirements. All interior is clad in stainless steel. OZTI refrigerated containers can be transported by air, sea, rail or road transport as a standard shipping container.

20 Ft. Freezer



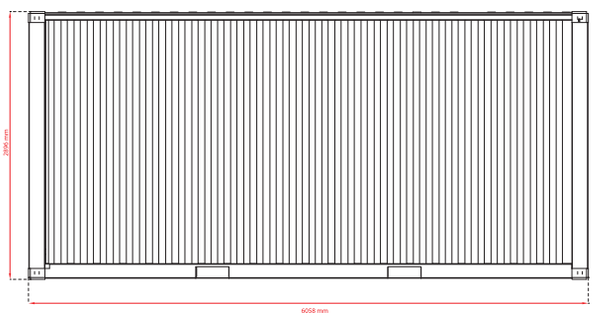

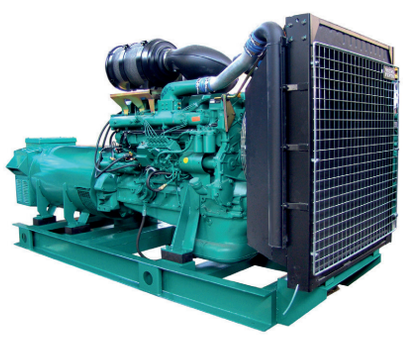

Generator

Information:
Diesel Generator: 20 kVA
Output Power: 20.3 kVA Prime
Dimensions (LxWxH): 650x1450x1150 mm
Engine: Perkins
No. of Cylinders: 4
Operating speed: 1500 rpm
Fuel Consumption: 6.1 Lt./h
Fuel Capacity: 75 Lt.

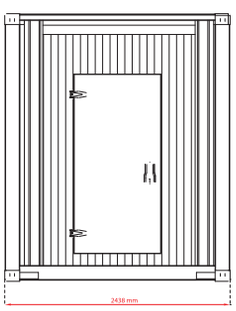

Freezer Evaporator

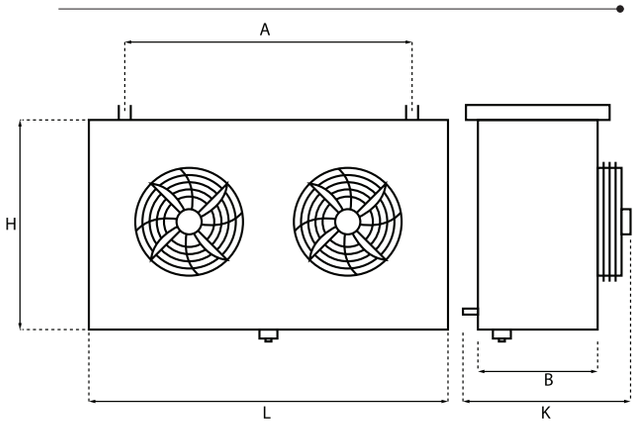

Evap Code: EDF-300
Evap Type: CUBIC
Evap Capacity: 3300 W.
Evap Supplier: Kontherm or Equal

MODEL	DIAMENTIONS				
	A	L	H	K	B
KES 302	835 mm	1125 mm	430 mm	470 mm	290 mm

Freezer condenser & compressor

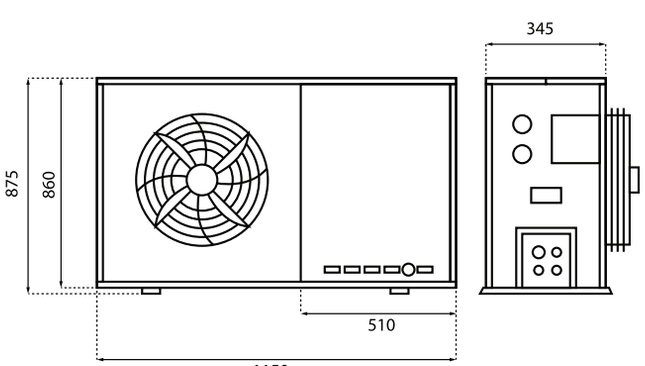

Compressor Brand: Bitzer / 3 hp Semi Hermetic
Compressor Type: Air
Cooling Capacity: 2891 W.

20 Ft. Reefer



Freezer - Reefer Model 1



Freezer - Reefer Model 2

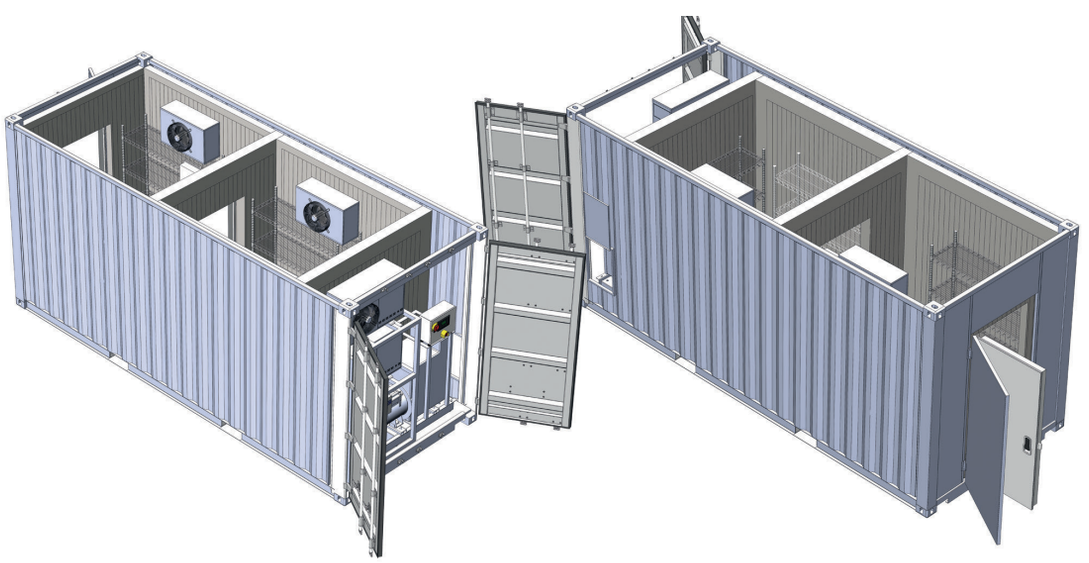

Evaporator



Condenser & Compressor



GENERAL TERMS

- All our products are guaranteed for 2 (Two) year against any manufacturing and installation defects.
- Our cooling units are being manufactured in Turkey under the brandname of OZTICOLD with CE certificates
- The units are fully automated with electrical defrosting and digital display (EVCO EVX 214 Made in ITALY)
- TECUMSEH /HERMETIC, COPELAND/SCROLL and BITZER brand name compressors, DANFOSS type expansion valves and fan controllers
- GUVEN liquid receivers and CASTEL dryer and selenoids are some of our major components we use in our units
- We have Schneider brand name automatic fuses, thermic relays and contactors as standart components on our switchboards
- Evaporators and units are electrostatically painted on galvanised sheets so having high endurance to corrosion
- All units are tested under 30 bar before being dispatched
- Unless otherwise is specified all the units are due to 380V/3hp/50hz conditions
- In standart units max. +42 C°, and in tropic climate units an ambient temperature of +49 C° is considered
- All devices are sent together with their user manuals to assure their true usage and make an easy maintenance.
- The cooling fans are of EBM-PAPST brand or equal and comply with IP54 norms.
- The cold room evaporators are of KARYER, KONTHERM, THERMOWAY or of an equivalent brand name.
- TECUMSEH /HERMETIC, COPELAND/SCROLL and BITZER/SEMI HERMETIC brand name compressors are prefered in the units.



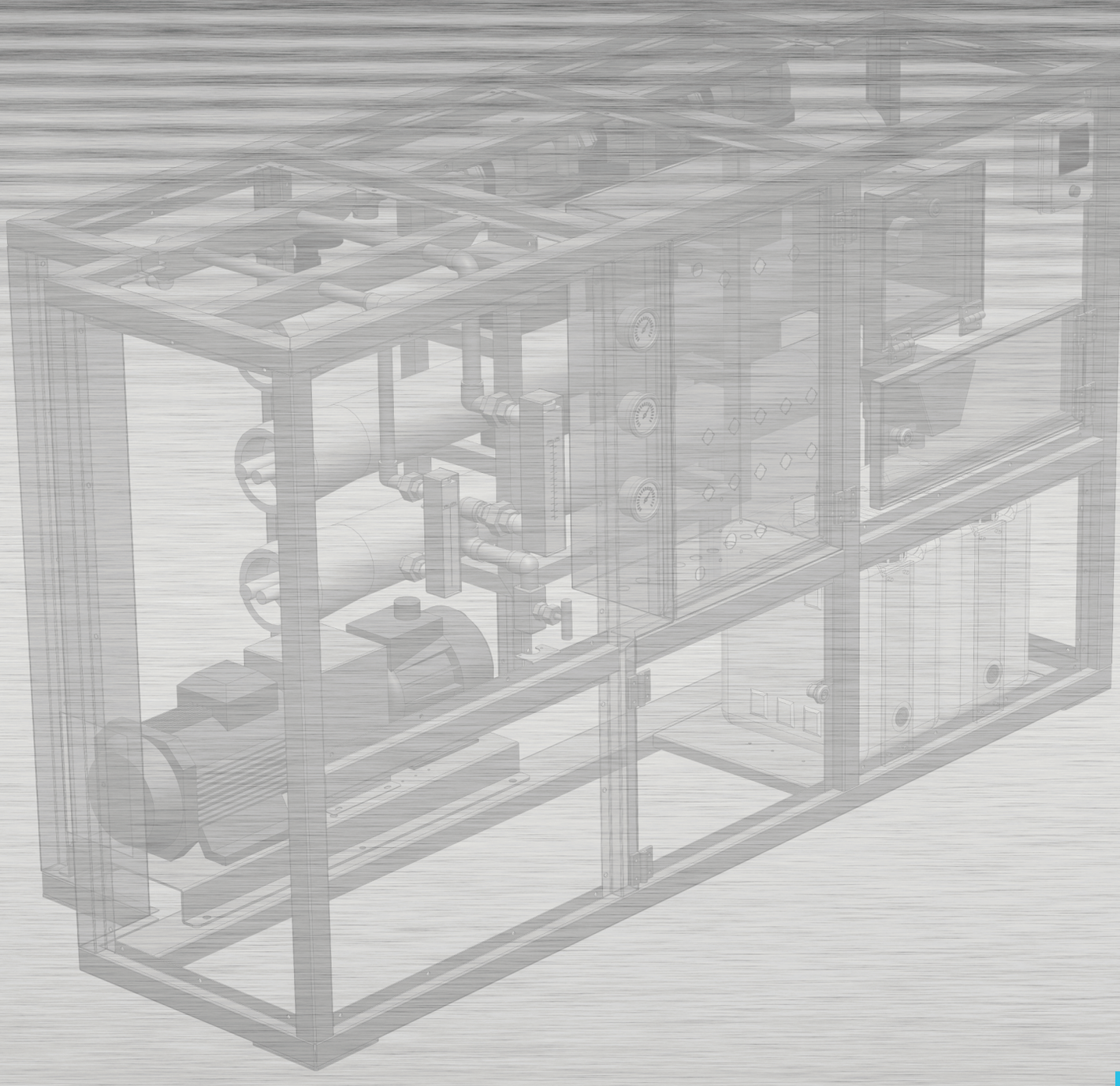

Water Purification Systems

Water Purification System



OZTI mobile water purification system produce drinking water from almost any creek, pond, lake or sea water. The system is based on the reverse osmosis technology and removes dust, heavy metals, organics and bacteriologic pollution without requiring toxic chemical treatment.
OZTI Water purification system is quickly and easily deployed anywhere in the world and can operate indefinitely.The system is complete with trailer, borehole type pump, pre-filter, reverse osmosis unit, clean water tank and power generator. Permeate water quality and all equipments are controlled by PLC.

Process Flow:

- Raw water pump: Makes water intake from water source.
- Pre-filtration: Removes large particulate matter prior to purification treatment thus protects the membranes.
- Reverse Osmosis system with high pressure resistant membranes
- Ultraviolet disinfection provides additional safety and destroy all virus and bacteria
- Post Chlorination prevent the growth of bacteria

	OZTI RO S500 (Salty Water)	OZTI RO F600 (Fresh Water)
Production at fresh water	max 600 lt/hr	max 600 lt/hr
Production in the sea water flow	max 500 lt/hr	N/A
Recovery at fresh water	25%	25%
Recovery at sea water	20%	N/A
3 Step Pre-filtration	80µ, 5µ sediment filter, blok carbon filter	80µ, 5µ sediment filter,blok carbon filter
High pressure pump flow	2,5 m3/saat	4.5 m3/saat
High pressure pump power	5.5 kw	2.2 kw
Membrane pcs.	3	2
Raw water temperature	+5°C +35°C	+5°C +35°C

Design Criteria:

- TDS ← 45000 ppm (sea water)
- TDS ← 20000 ppm (fresh water)
- Min inlet pressure: 3 bar
- Inlet water pressure: 3-7 bar
- Inlet water temperature: 5-35 °C
- Inlet water ph: 6,5- 9,5
- Inlet water max Mn concentration: 0,05 ppm
- Inlet water max turbidity: 1,5 NTU
- Operating Pressure: 20 - 65 bar

Standard Features:

- FRP vessels resisted to 1000 PSI
- 316L stainless steel line
- Membranes resisted to high pressure
- Production and waste flowmeter
- Operation manometers
- Dublex high pressure pump
- PLC control
- Online conductivity meter
- Stainless steel chassis
- Cleaning water tank



Raw water pump

Generator



POWER	7.5 kVA
ENGINE TYPE	4-STROKE DIESEL
COOLING SYSTEM	AIR COOLED
FUEL CONSUMPTION	2.32 l/h
ALTERNATOR TYPE	MONOPHASE
CONTINUOUS VOLTAGE	220-240 V
CONTINUOUS FREQUENCY	50 Hz.
FUEL TANK CAPACITY	16 l.

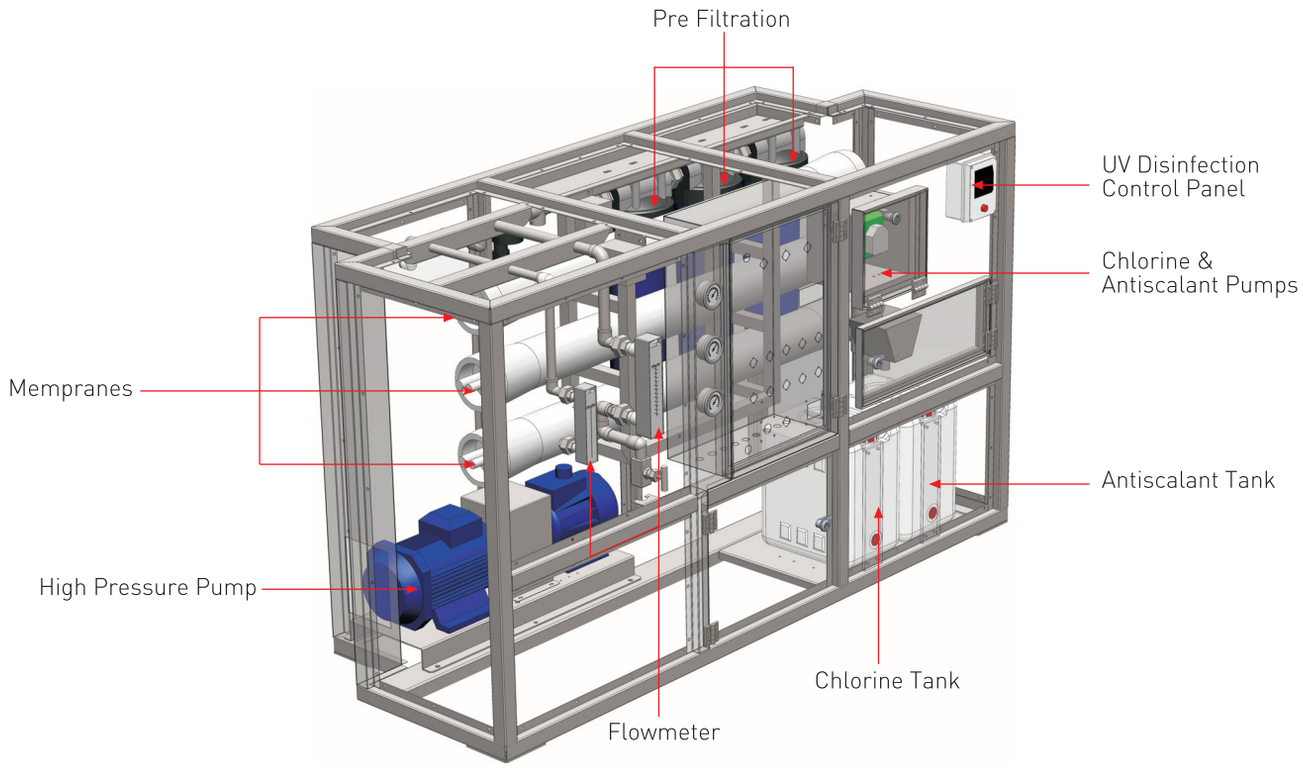



System Equipments

- Generator
- Feed Pump
- Multi-Media Filter
- Reverse Osmosis Unit
- Ultraviole Unit
- Post-Chlorination
- CIP unit can be added to clean the system periodically.

Design Criteria:

- TDS ← 45000 ppm
- Min inlet pressure: 3 bar
- Inlet water pressure: 3-7 bar
- Inlet water temperature: 5-35 °C
- Inlet water ph: 6,5- 9,5
- Inlet water max Mn concentration: 0,05 ppm
- Inlet water max turbidity: 1,5 NTU
- Operating Pressure: 20 - 65 bar



Special design OZTI water purification systems are the best solutions to produce large amounts of clean drinking water (up to 2000t drinking water per day.) The components are installed ready for operation in a 20 ft container.



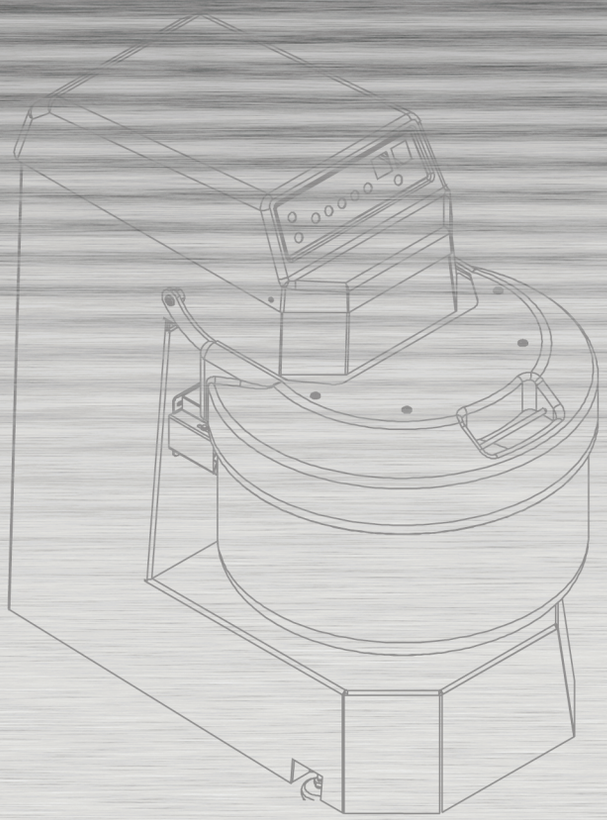

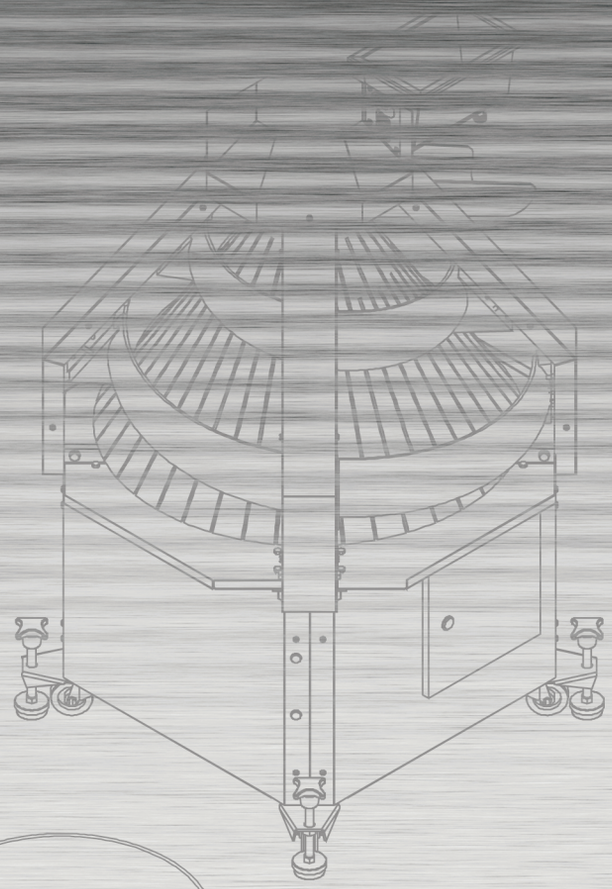

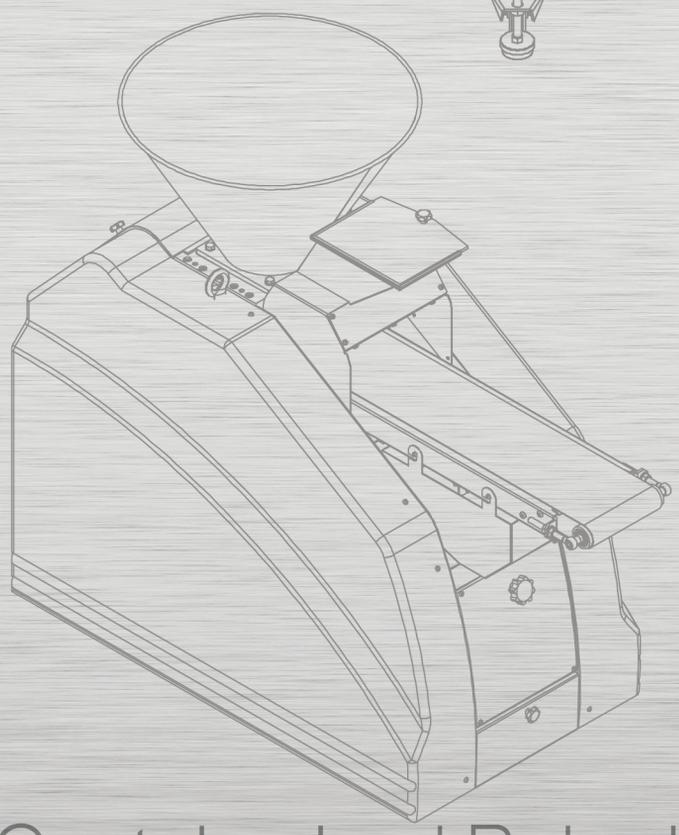

Containerized Bakeries



Rotating Oven

The product is a new generation rotating oven. The steam production is provided through the side plates. The baking balance is utterly homogenous. The burner is in the left corner of the back side and takes little room. The heating is provided by using LPG, GAS OIL, NATURAL GAS and ELECTRICITY.



TECHNICAL FEATURES	
Model	Rotating Oven
Width ± 5 mm	1375
Lenght ± 5 mm	2455
Height ± 5 mm	2640
Weight ± 5 kg.	1150
Type of Electricity	220/380 V 50 Hz N+PE
Fan Motor kW-Amp.	3 kW 11.6 A-6.5 A (1420 rpm)
Gearbox Motor kW-Amp.	0,37 kW 2 A-1.2 A (1390-9 rpm)
Steam Hood Motor	0,37 kW 1.73 A-1 A (2800 rpm)
Burner Motor	0,37 kW 1.73 A-1 A (2800 rpm)
Total Electric Power	4.11 kW
Custom Code	843.810.100.000

17-18 minute cooking time,
1 pan trolley loading capacity
500 piece 200 gr bread in one hour

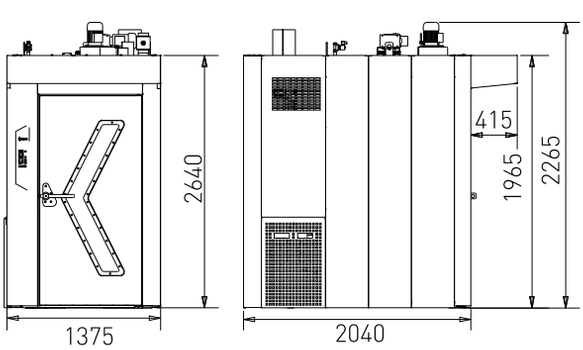

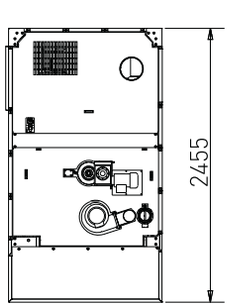

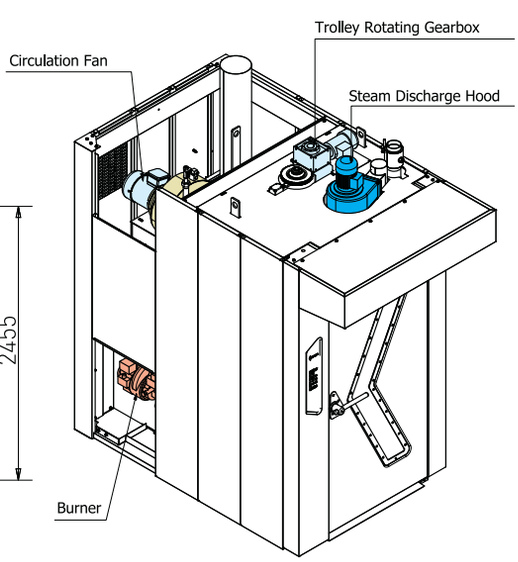

Fermentation Compartment

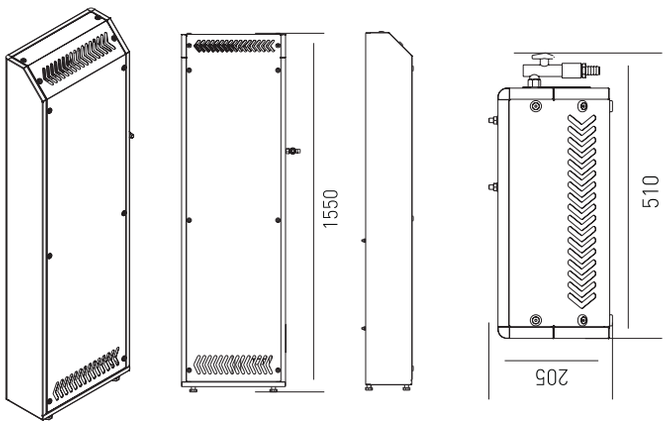

TECHNICAL FEATURES	
Model	Steam Producer
Serial Number	-
Width ± 5 mm	510
Lenght ± 5 mm	205
Height ± 5 mm	1550
Weight ± 5 kg.	44
Type of Electricity	220/380 V 50 Hz N+PE
Resistance Power kW. Amp.	1.5 kW - 6.8 A
Steam Unit Power kW. Amp.	6 kW - 15.7 A
Total Electric Power	7.5 kW
Custom Code	843.810.100.000



Designed to be used in the fermentation compartments. Seperately produced electrical control pannel can be placed out of the compartment to avoid the troubles which may occure because of the humidity. Heat and humidity can be adjusted seperately. Heat range is +20-+50 C and humidity range is 65%-95%.

20 minute fermentation time,
2 pan trolley loading capacity

Spiral Mixer

The double speed motor driven spiral mixing arm guarantees a homogeneous and fast mixing. So, a better quality dough can be mixed in a shorter time. The bowls, spiral mixing arms and knives which are made of AISI 304 quality stainless steel are imported from Italy. The beddings of the bearings are produced for heavy duty to be used for also hard dough types. Monoblock chasis system prevents vibration and noises. Electrical components and security systems are with accordance to EU standards. The cover of the bowl is completely closed to avoid flour dust. When the cover is opened, the machine stops. When closed, the machines goes on the programme from the last stop. There is no need to make another programme.

TECHNICAL FEATURES	
Model	Spiral Mixer
Width ± 5 mm	845
Lenght ± 5 mm	1370
Height ± 5 mm	1420
Weight ± 5 kg.	690
Type of Electricity	220/380 V 50 Hz N+PE
Spira Motor kW-Amp	5.5 kW.-7.5 kW. 16,5 A-16 A (700-1450 rpm)
Bowl Motor kW-Amp	0,75 kW./4.5 A 2,5 A (70 rpm)
Total Electric Power	8,25 kWt.

130 kg. dough from 75kg. flour
15-16 minute doughing time / 390kg. dough per hour
270-280gr (approx.) dough for 200gr bread, 390 kg./280 gr =1300 piece per hour



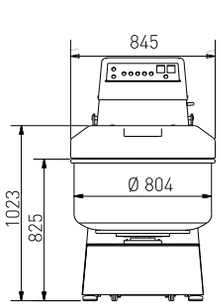

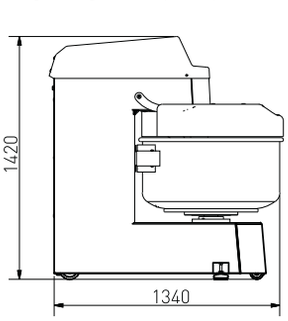

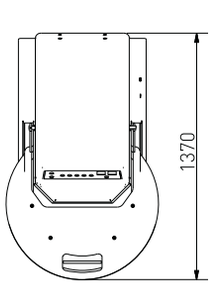

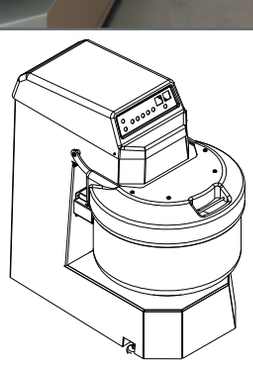

Volumetric Dough Divider

Divides the dough with the requested weight gently, without crashing. So, the quality of the bread is higher and yeast consumption is lower. One piece bonnet on the two sides of the machine prevents from taking flour inside the mechanical and electronic parts. Conveyor belt is cleaned when the machine is running. The waste is collected in the special box which is placed under the belt. material with accordance to EU standards. 3 different speed can be adjusted from the motor wheel. Electronic speed control can be bought as an option. High resistance body prevents from vibrations. Lubrication is done by a closed system to avoid oil loses and to extend the life of the oil. The pipes which are used for lubrication are hydraulic type. Electrical system is with accordance to Eu standards.



TECHNICAL FEATURES	
Model	Volumetric Dough Divider
Width ± 5 mm	675
Lenght ± 5 mm	1185
Height ± 5 mm	990
Weight ± 5 kg.	460
Type of Electricity	220/380 V 50 Hz N+PE
Machine Motor kW-Amp.	1,5 kW
Total Electric Power	1,5 kW/7,27 / 4,2 A(940 rpm)
Cutting weight range	150-700 gr.
Custom Code	843.810.100.000

150 gr.to 700 gr. bread dough / 2100 piece bread in one hour on average speed

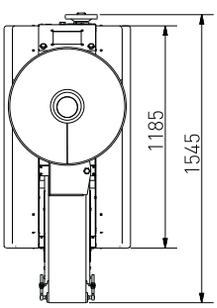

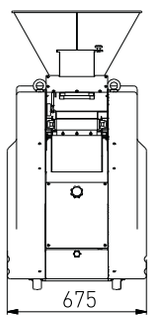

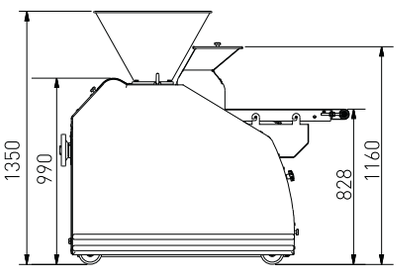

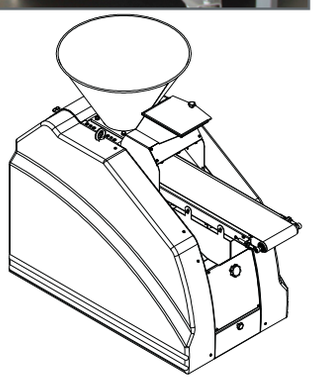

Dough Rounding Machine

Dough rounder machines gives the round shape to the dough pieces by the curves of the channels and aluminium cone. Flour quantity can be adjusted easily. Electrical components are with accordance to EU standards. Channels and cone can be coated with teflon as an option. Rubber feet are used to fasten the machine to the ground to avoid the damages on the flor coating. Air blower for the channels is standard. Hot air blowing can be bought as an option. Bonnets are coated by electrostatic powder paint. Stainless steel bonnets can be bough as an option. Monospeed machine can be also produced by elctronic speed control unit.

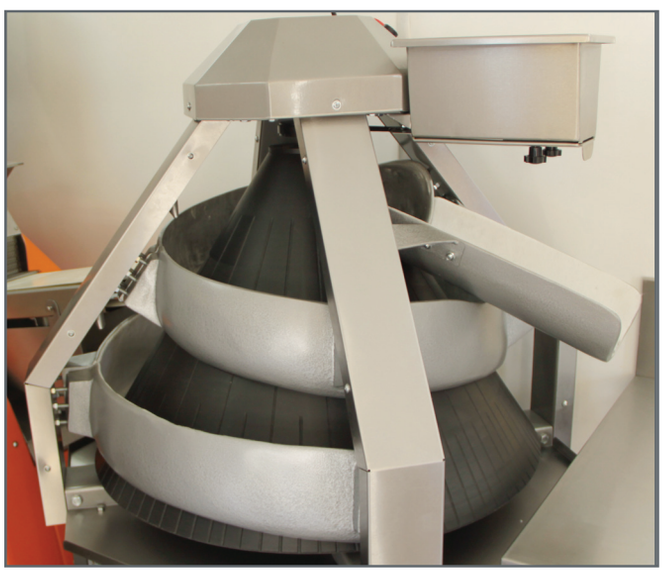

TECHNICAL FEATURES	
Model	Dough Rounding M.
Width ± 5 mm	920
Lenght ± 5 mm	920
Height ± 5 mm	1415
Weight ± 5 kg.	240
Type of Electricity	220/380 V 50 Hz N+PE
Machine Motor kW-Amp.	1,1 kW / 4,5 A-2,6 A (1400rpm)
Total Electric Power	1,1 kW
Custom Code	843.810.100.0000

2100 piece bread in one hour on average speed

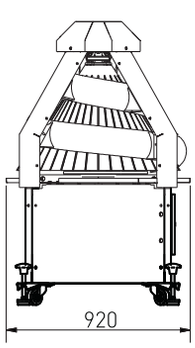

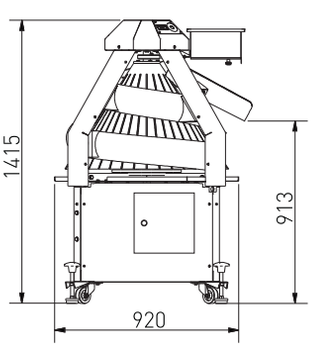

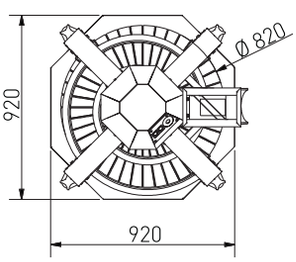

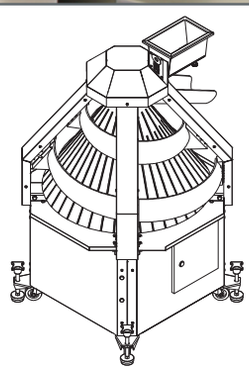

Air Condition

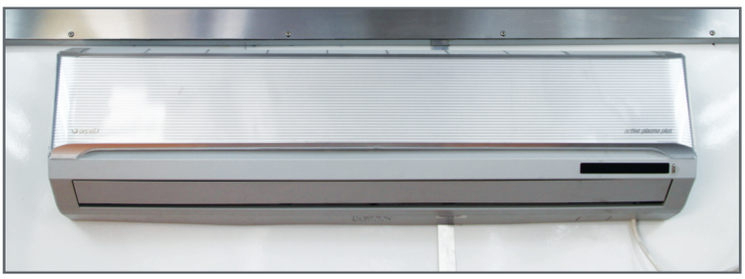

Features

- 24,000 Btu / h
- Air filter
- Horizontal- vertical air flow groove
- Thermostat
- Digital display
- Remote control

GeneratorAPD33M



TECHNICAL DATA DIESEL GENERATING SETS 400 /230V - 50 Hz

	MODEL			APD21M3	APD23M	APD27M3	APD33M	APD42M
GROUP	Power PE 0B	StandBy	kVA	21	23	27	33	42
			kW	16,8	18,4	21,6	26,4	33,6
		Prime	kVA	18	21	23	30	38
			kW	14,4	16,8	18,4	24,0	30,4
DIESEL ENGINE	Engine			Mitsubishi	Mitsubishi	Mitsubishi	Mitsubishi	Mitsubishi
	Model			S3L2-63SGH	S4Q2-63SG	S4L2-63SGH	S4L2-63SG	S4L2-63SG
	Engine Power Output at rated rpm		kwm	21.2	28.8	28.8	31.6	39
			HP	28.408	38.592	38.592	42.344	52.26
	Aspiration and Cooling			Natural	Natural	Natural	Natural	Natural
	Total Displacement		Lt.	1.31	2.5	1.75	3.31	3.331
	No. of Cylindirs and Build			3-Inline	4-Inline	4-Inline	4-Inline	4-Inline
	Engine Speed		rpm	3000	1500	3000	1500	1500
	Bore and Stroke		mm x mm	78x92	88x103	78x92	94x120	94x120
	Compression Ratio			22:1	22:1	22:1	22:1	17:1
	Govemor			Mechanical	Mechanical	Mechanical	Mechanical	Mechanical
	Fuel Consumption at full load		Mhr	6.33	5.58	8.6	7.6	10.5
	Fuel Tank Capacity		Lt.	38	80	45	80	80
	Oil Capacity		Lt.	4.2	6.5	6	10	10
	Coolant Capacity		Lt.	4.2	4	2.5	5.5	5.5
	Radiator Cooling Air		m3/min	64	43	85	65	65
	Air Intake - Engine		m3/min	1.9	1.7	2.3	2.25	2.9
	Exhaust Gas Flow		m3/min	4.5	4.5	5.85	6	7.6
OPEN TYPE		Dimensions (L x W x H)	mm	1050 x 600 x 900	1380 x 600 x 1000	1150 x 600 x 1000	1480 x 700 x 1000	1480 x 700 x 1000
		Dry Weight	kg	380	560	420	700	700
SOUND ATTENUATED TYPE		Dimensions (L x W x H)	mm	1830 x 823 x 1192	1830 x 823 x 1192	1450 x 823 x 1092	1830 x 823 x 1192	1830 x 823 x 1192
		Dry Weight	kg	480	700	530	850	850

Pan Trolley

16 Rack 60 x 80 Pan Trolley / Aluminium Metarial

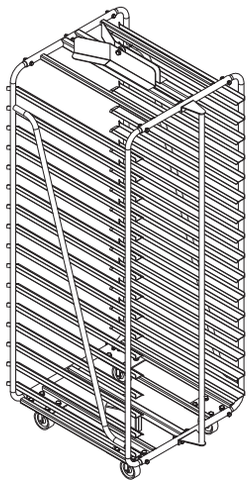

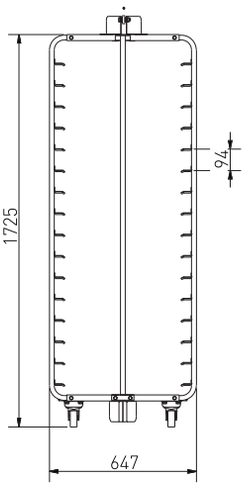

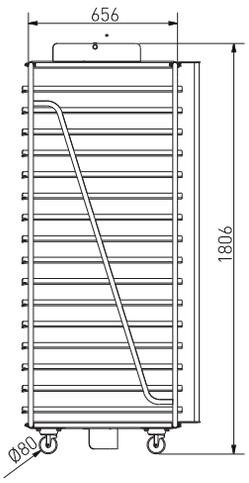

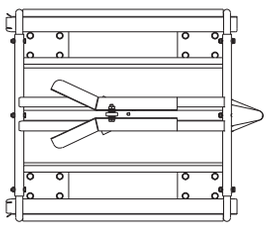

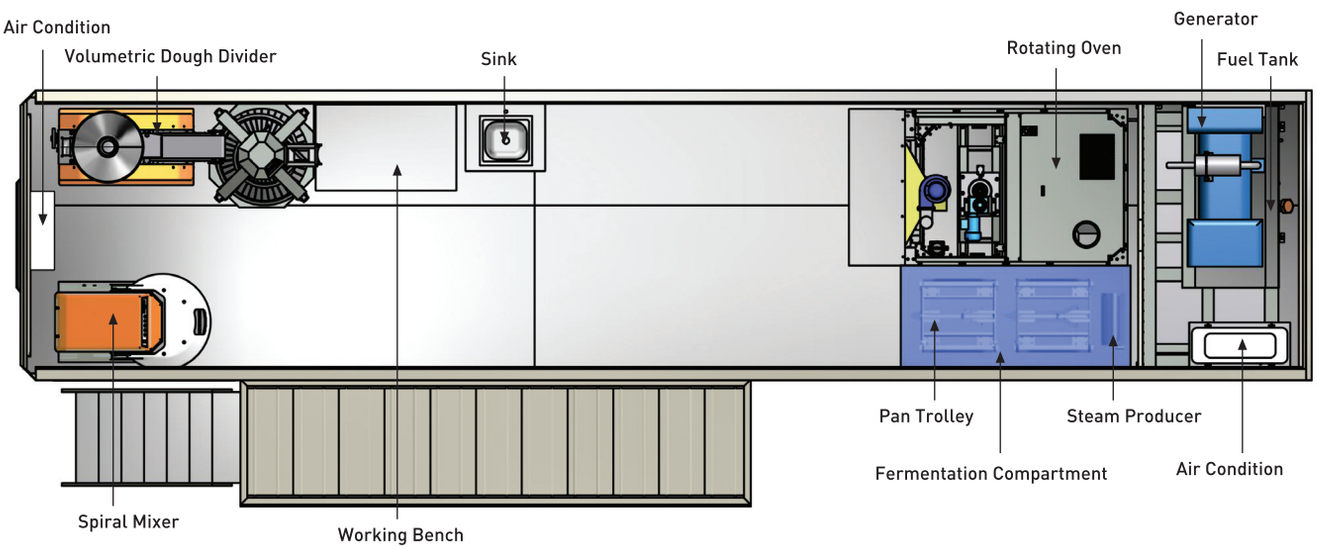

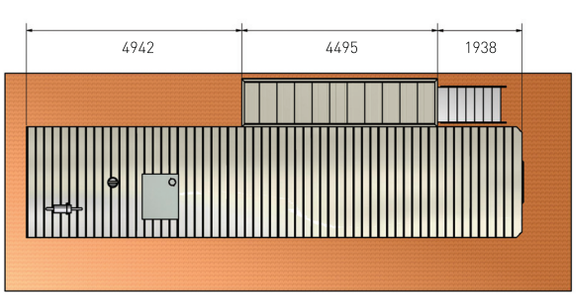

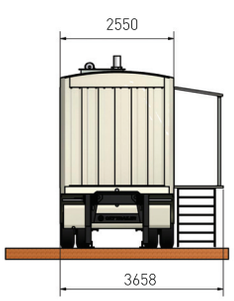

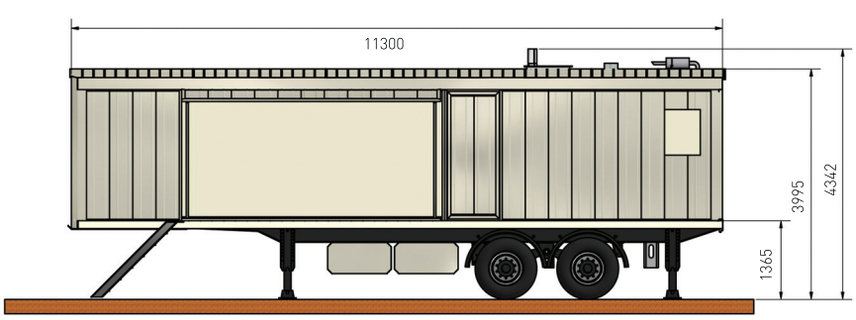

500 pieces bread of 200 gr. in one hour! Total electric power 26 kW.

Code	A.5421.00B.02
Dimensions	11300 x 2550 x 4000 mm
Chassis No	NP905V102AA002002
Axle	2
Brake System	Air Break
Tyres	Continental (12,00 R 22,5) 8+1
Tire Rim	Metal 9,00R 22,5 8+1
Bumper	Shiny Double Tire
Suspension System	Mechanic Parabolic 3 Leaf Spring
Floor Travers	Z Bend
King Pin	2" Ø
Mechanic Leg	4 pcs Ovro 300T 800
Floor Metal Sheet	4 mm St52
Front-Side Walls and Rear Door	1,2 mm CRS Quality Mild Sheet
Ceiling Metal Sheet	1,2 mm CRS Quality Mild Sheet
Rear Door	Two Side 270°Degree Extensible Container Type
Electric System	24 Volt SABA
Fire Extinguisher	1 pcs SABA



Baking with the OZTI CONTAINERIZED BAKERY includes the different steps involved in the process: kneading, weighing, manual forming,fermentation (rising), baking and natural cooling.

Oven

Lidya serie pastry ovens are for cooking bread or pastry between 150/250 °C . Ovens can work under hard climate conditions like 5/45 °C and up to 80% relative humidity.

Tray Dimensions : 40 x 60 cm - 10 trays
Cooking Time : 10 - 20 minutes
Temperature Control : 0 / 400 °C
Steam Temperature :120 °C (0 - 10 seconds period)



TECHNICAL FEATURES			
Model	LIDYA 10 E	Phase	3
Width ± 5 mm	1035	Resistance	2 x 9 Kw = 18 kW
Length ± 5 mm	1075	Circulation motor amp.	1.65 A-0.65 A
Heigth ± 5 mm	1410	Steam outside motor amp.	1.20 A-0.70 A
Weigth ±5 kg	260	Circulation motor rpm&power	1400 rpm 0.55 kW
Warranty period	1 year / yıl	Steam outside motor rpm&power	2840 rpm 0.25 kW
Type of electricity	380 V 60 Hz N+PE	Standards	TSE -ISO 9001
Electric power (total) kw	19.5 kW	Custom code	843.810.100.000

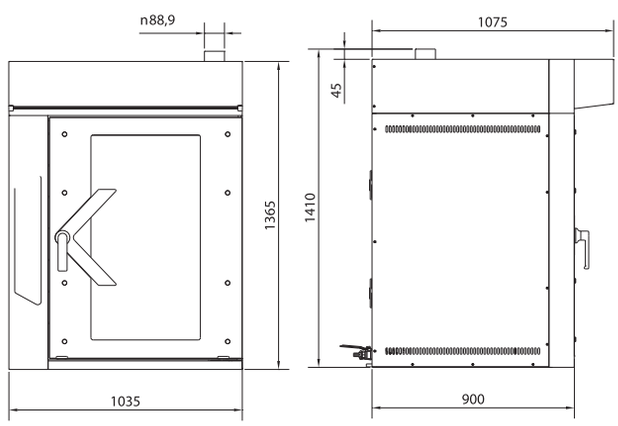

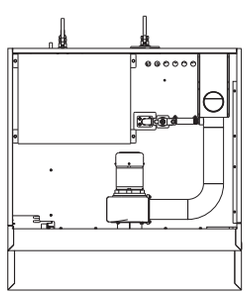

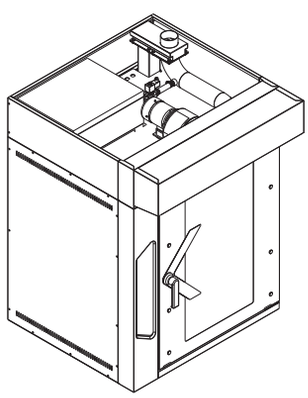

Spiral Mixer

The double speed motor driven spiral mixing arm guarantees a homogeneous and fast mixing. So, a better quality dough can be mixed in a shorter time. The bowls, spiral mixing arms and knives which are made of AISI 304 quality stainless steel are imported from Italy. The beddings of the bearings are produced for heavy duty to be used for also hard dough types. Monoblock chasis system prevents vibration and noises. Electrical components and security systems are with accordance to EU standards. The cover of the bowl is completely closed to avoid flour dust. When the cover is opened, the machine stops. When closed, the machines goes on the programme from the last stop. There is no need to make another programme.



TECHNICAL FEATURES

Model		SP 80	Spiral motor current Amp.	380 V / 3.5 kW. 10.3 A
Width	± 5 mm	745		6 kW. 11.9 A
Length	± 5 mm	1285		(6 kW. 11.5 A)
Heigth	± 5 mm	1420	Bowl motor current Amp.	380 V 2.9 A
Weigth	±5 kg	660	Spiral motor rpm & power 1 Speed	720 -3.5 kW.
Warranty period		1 year / yıl	2 Speed	1450- 6 kW.
Type of electricity		380 V 50 Hz N+PE	Bowl motor rpm & power	700-0.75 kW.
Electric power (total) kw		6.75 kW.		

80 kg. dough from 50 kg. flour / 15-16 minute doughing time / 240 kg. dough per hour240-250 gr (approx.) dough for 200gr bread, 240 kg./250 gr =900 piece per hour/

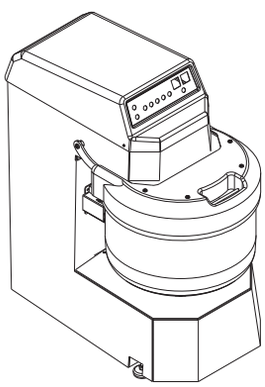

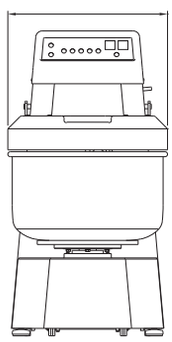

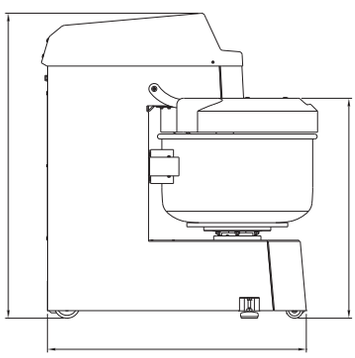

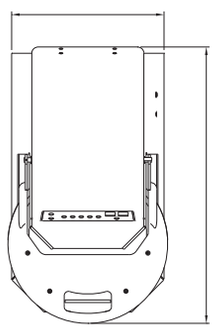

Spiral Mixer

Divides the dough with the requested weight gently, without crashing. So, the quality of the bread is higher and yeast consumption is lower. One piece bonnet on the two sides of the machine prevents from taking flour inside the mechanical and electronic parts. Conveyor belt is cleaned when the machine is running. The waste is collected in the special box which is placed under the belt. All of the parts which are contacting to flour or dough are made of stainless steel material with accordance to EU standards. 3 different speed can be adjusted from the motor wheel. Electronic speed control can be bought as an option. High resistance body prevents from vibrations. Lubrication is done by a closed system to avoid oil loses and to extend the life of the oil. The pipes which are used for lubrication are hydraulic type. Electrical system is with accordance to Eu standards. Different weight ranges are available. Poliamide wheels allows to change the place of the machine easily without giving damage to the floor.



TECHNICAL FEATURES

Model		DM 2000	Warranty period	1 year / yıl
Serial number			Type of electricity	380 V 50 Hz N+PE
Width	± 5 mm	685	Electric power (total) kw	1.5 kW.
Length	± 5 mm	1333	Machine motor current amp.	7.27 / 4.2 A 1.5 kW.
Heigth	± 5 mm	1440		(940 rpm-dev/dak)
Weigth	±5 kg	490		

150 gr.to 700 gr. bread dough, 2100 piece bread in one hour on average speed

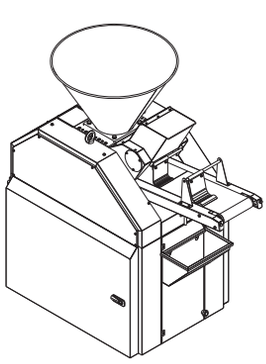

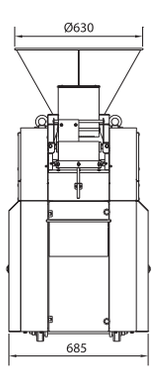

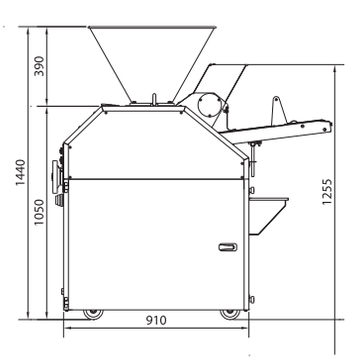

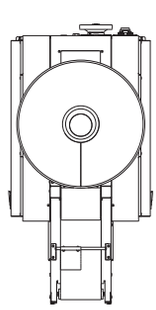

Fermentation Cabinet

Fermentation cabinet is for dough proofing at 0 /40 °C and 0% - 80% relative humidity. Time, temperature and fermentation level are all adjustable.



TECHNICAL FEATURES			
Model	MO10	Type of electricity	220 V 50 -60Hz N+PE
Width ± 5 mm	1035	Electric power (total) kw	2.5
Length ± 5 mm	985	Phase	1
Heigth ± 5 mm	775	Resistance	2x1 kW
Weigth ±5 kg	80	Circulation motor rpm&power	1400 rpm 0.038 kW
Warranty period	1 year / yıl	Standards	TSE -ISO 9001
		Custom code	843.810.100.000

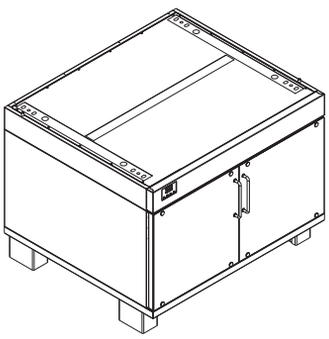

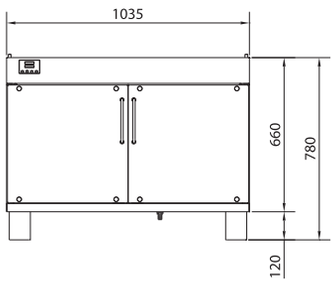

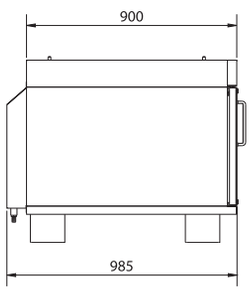

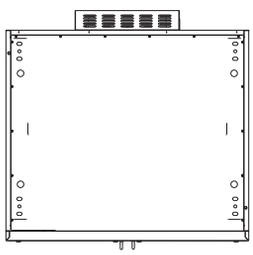

Generator

TECHNICAL FEATURES			
GROUP			
Stand-by power	55(44) kVA (kW)	Power factor	0,8 cosQ
Prime power	50(40) kVA (kW)	Frequency	50 Hz
ENGINE			
Make	INTER	Cylinder displacement	4,1 mm
Model	IDE442NG	Cylinder bore/stroke	105/118
Rpm	1500 rpm	Compression ratio	17,5:1
Prime power	46 (62,6) kW(hp)	Electric system	12VDC
Stand-by power	49 (66,6) kW(hp)	Fuel consumption %50 loaded	6,8 lt/h
Number of cylinder	4	Fuel consumption %75 loaded	9,8 lt/h
Cylinder combination	In line	Fuel consumption %100 loaded	13,1 lt/h
Air inducation system	Natural	Fuel tank capacity (w/canopy)	284 lt
Cooling system	Water Cooled	(W/o canopy)	126 lt
Governor type	Mechanic lt		
ALTERNATOR			
Type	Synchron.Brushless	Isolation class	For 10 seconds % 300
Overloaded	For 1 hour %110 in 12 hours,	Voltage	H
Insulation resistance	For 2 minutes % 150,	Tolerance of voltage	231/400 V ±%0.5
Short circuit current	Minimum 1800 Volt-2U+1000V		
DIMESIONS			
Width w/o canopy (w/canopy)	820(1060) mm	Height w/o canopy(w/canopy)	1350(1600) mm
Lenght w/o canopy (w/canopy)	1720(2650) mm	Weight w/o canopy (w/canopy)	822(1050) kg

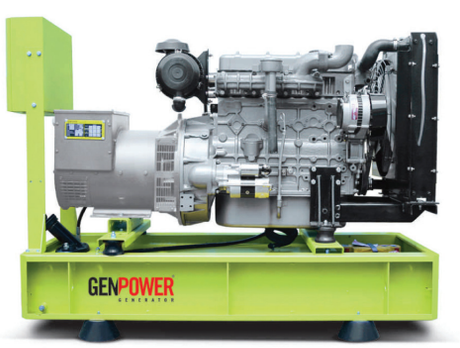

ENGINE
- INTER Heavy duty diesel engine
- Revolution: 1500 rpm
- Water cooled
- Tropical type radiator

Water Tank



TECHNICAL FEATURES	
Width	1005
Length	1855
Heigth	580
Weigth	
Warranty period	1 year / yıl
Volume	1020 m3

Working Bench



TECHNICAL FEATURES	
Width ± 5 mm	2200
Length ± 5 mm	855
Heigth ± 5 mm	1070
Weigth ± 5 kg.	
Warranty period	1 year / yıl

Air Condition



- Air filter
- Horizontal- vertical air flow groove /
- Thermostat

TECHNICAL FEATURES	
Cooling capacity	13000 Btu / h- 3.8 kW
Heating capacity	16000 Btu / h- 4.6 kW
Humidifier capacity	1.5 lt. / h
Voltage	220-240 V / 50 Hz.

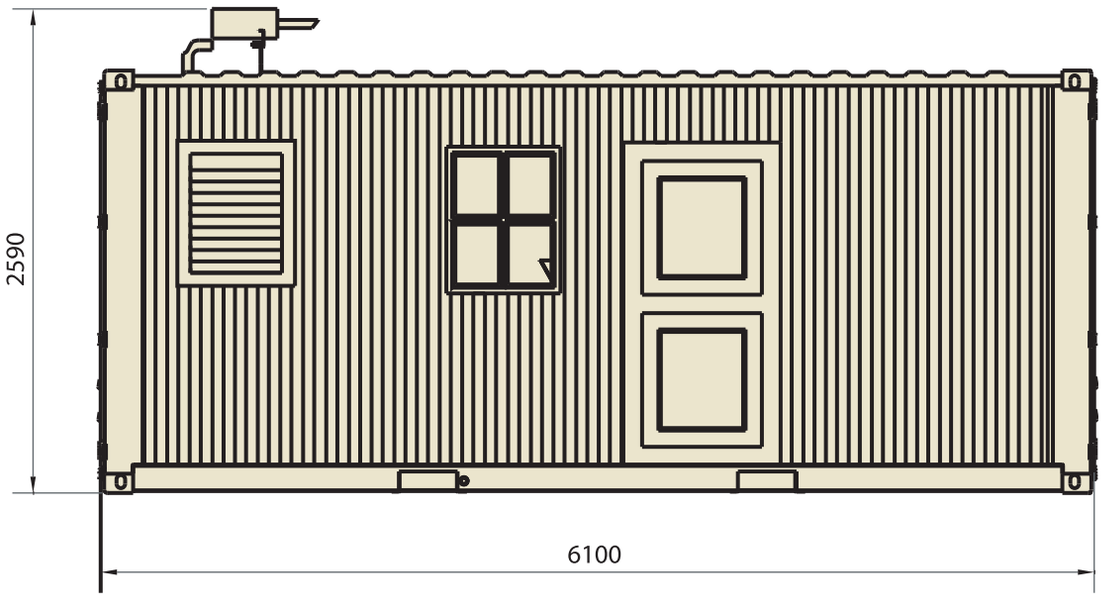
2590
6100

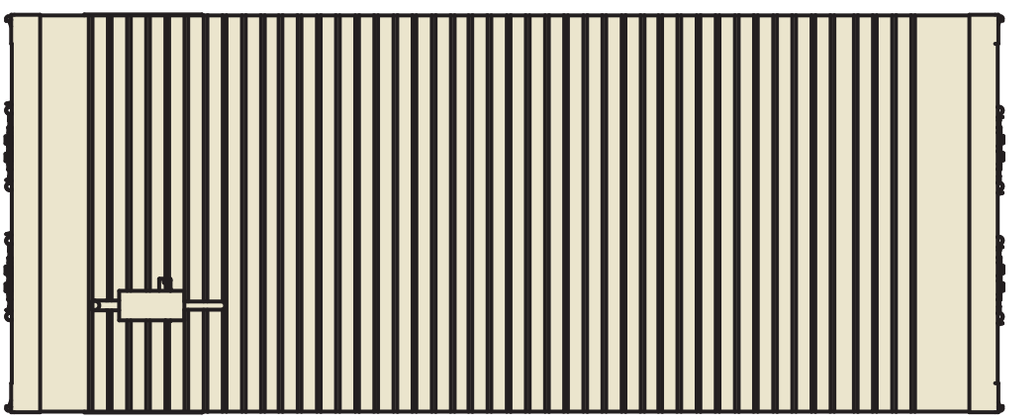

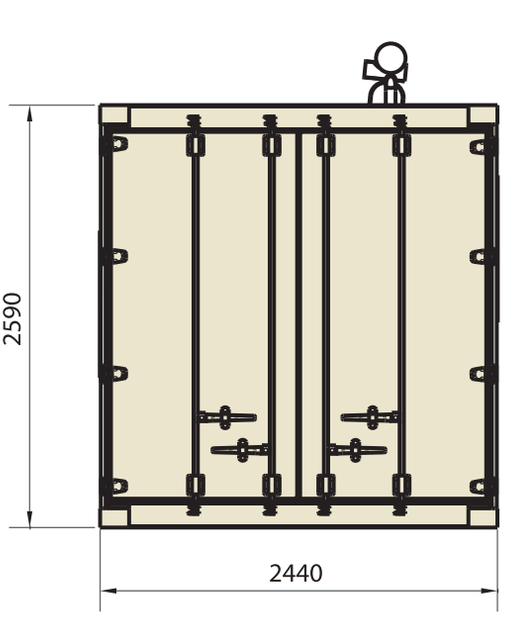
2590
2440

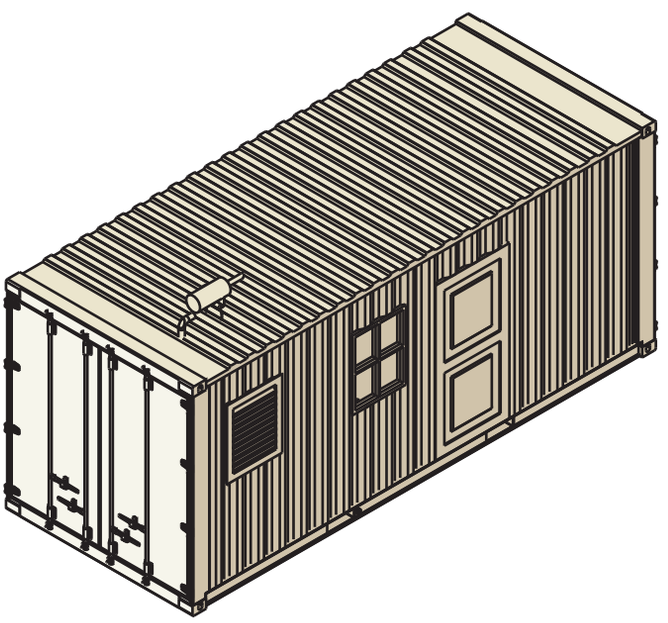

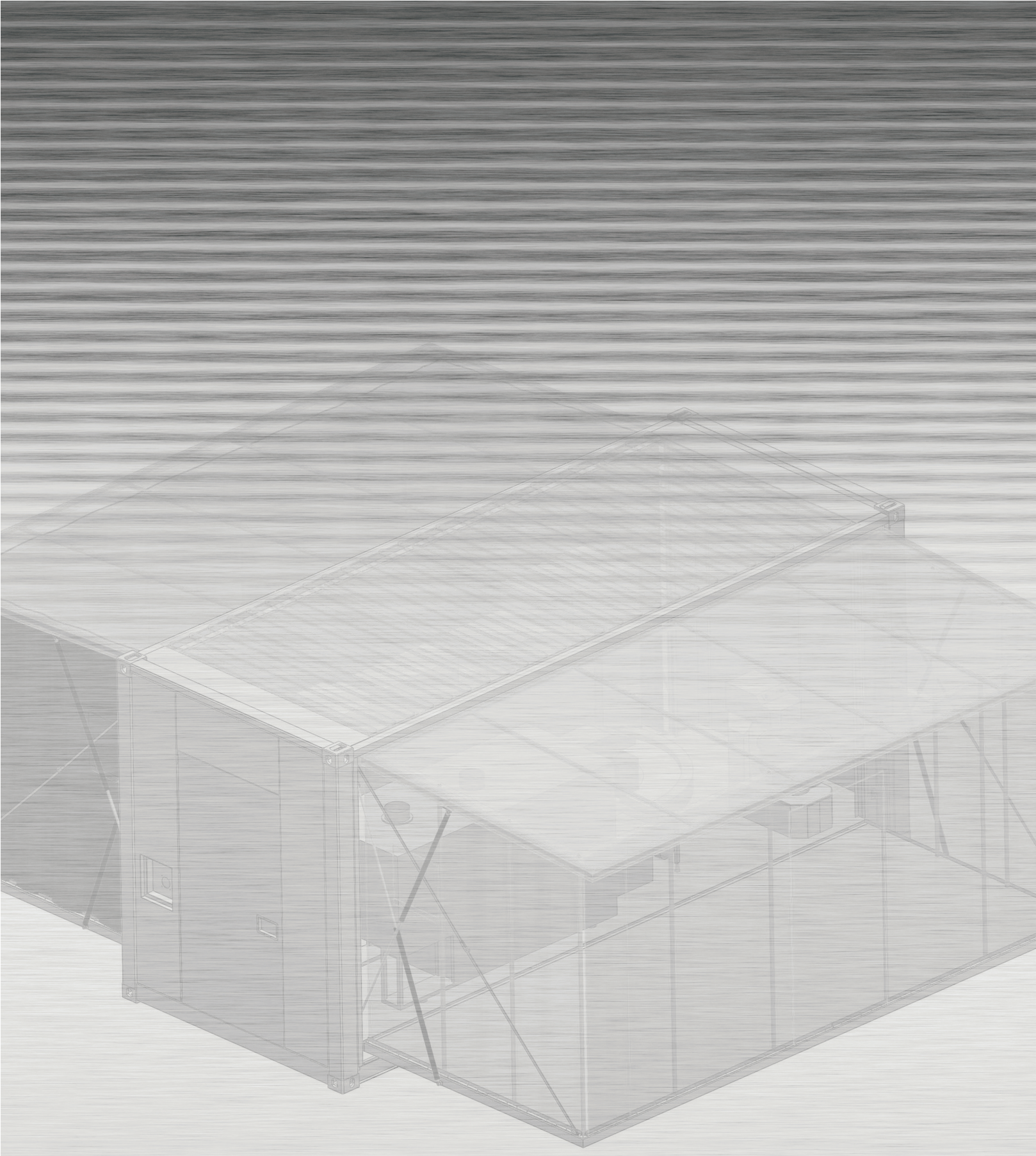

Bakery Container
(Pita Bread)

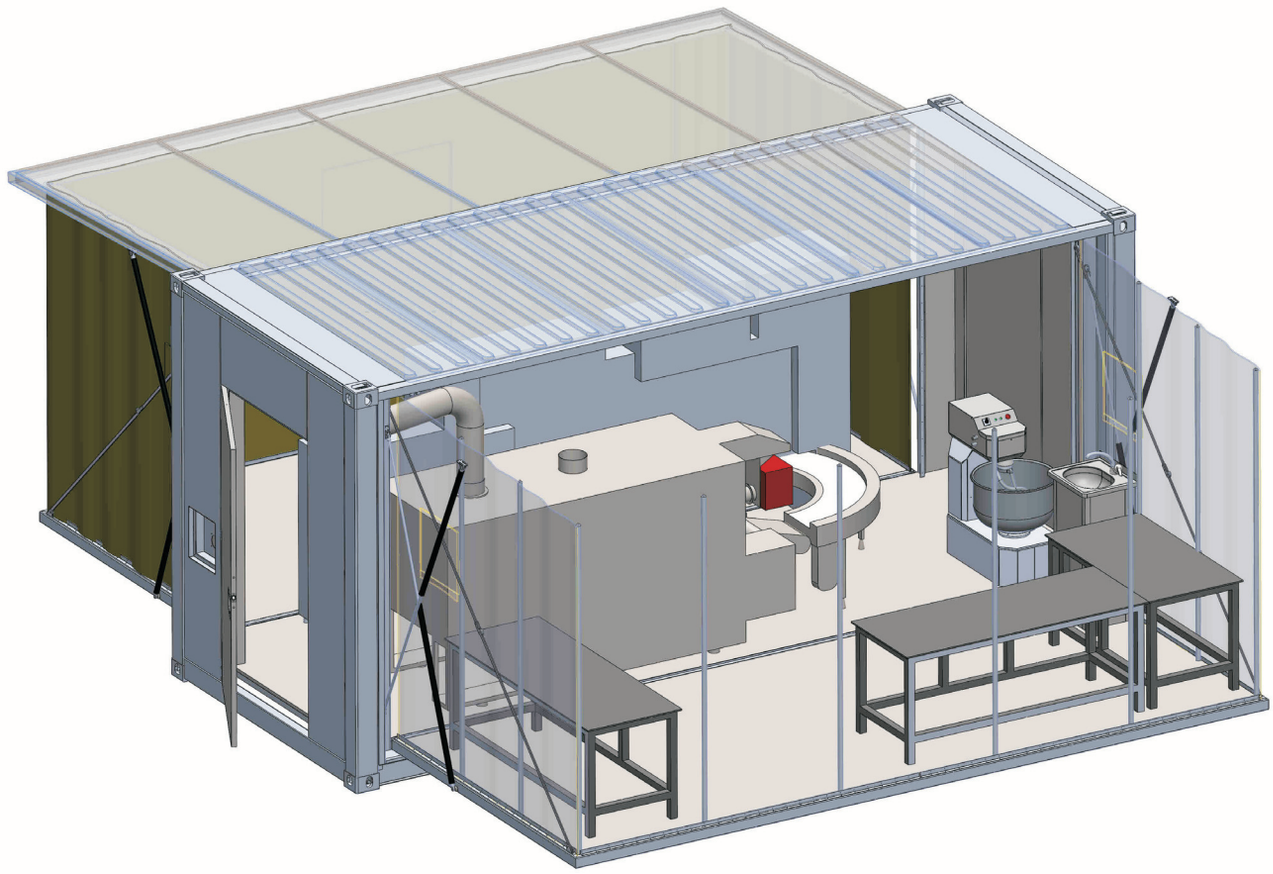

General Information

20ft 3-in-1 BAKERY CONTAINER for PITA BREAD is designed to meet civilian and military bakery needs under different climate and field conditions. System is mounted into an expandable 20 ft ISO container.
Designed and manufactured by Öztiryakiler with 70 years of experience in kitchen equipment, **20ft 3-in-1 BAKERY CONTAINER** is **A PERMANENT SOLUTION** for meeting the pita bread bakery service needs of modern armies, civil defense organizations, disaster coordination centers and aid organizations **UNDER HARDEST CONDITIONS IN THE SAFEST, FAST, HYGIENIC and EASIEST WAY**.

Specifications	
Dimensions (LxWxH)	6058 mm x 2.896 mm x 2438 mm (20' x 8' x 9.5')
Dough kneader	50 kg capacity
Production capacity	Up to 750 pieces/hour
Diameter of products	Up to 500 mm
Rated voltage	380 V
Frequency	50 Hz
No of phases	3P + N
Power	32 A

Installation and usage

20ft 3-in-1 Bakery Container for Pita Bread source requirements:

- The equipment need only one main input power cable 3Phases + Neutral + Ground
- Phase to phase Voltage: 380Volts
- Rated starting current for Bakery line: 16 Amp.
- Rated operating current :11 Amp.
- Frequency: 50 Hz.
- Power: 5 KW
- Voltage drop: -15%
- Over Voltage: 10%

20ft Bakery Container is designed to serve personnel on the field, installed into a 20ft ISO 1CC container and equipped with a pita bread bakery system, a dough kneader, sink and workbenches in order to achieve maximum flexibility and hygiene to prepare pita bread, pizza, as well as oriental pies such thyme, manakish, cheese manakish, lahmajoun etc.
In order to operate the Bakery Container for Pita Bread, following supplies and equipment are necessary:

- **Power Supply:** 380 V, 50 Hz 32 Amps threephase external power supply output is required to operate the electrical systems.
- **Water Supply:** Natural or artificial water sources are required in order to maintain clean water supply.
- **Waste Water Collector:** It is recommended to use a waste water tank to discharge waste water.

Bakery Container has a high mobility and can be transported on main and sub roads by connecting onto a trailer which is capable to connect 20ft ISO container. However, it is not designed for off-road transportation.

Dough Kneading Machine



OHY 50 Dough Kneading Machine Specifications			
Capacity	50 kg	Nominal current	5,3 A
Total input power	2,15 kW	Supply cable	5 x 2,5
Voltage requirement	400 V	Maximum noise	73 dBA
Working frequency	50-60 Hz	Class	IP 54

Button	Description
START I	Starts the machine at speed 1, 60 RPM
START II	Starts the machine at speed 2, 120 RPM
STOP	Stops the machine

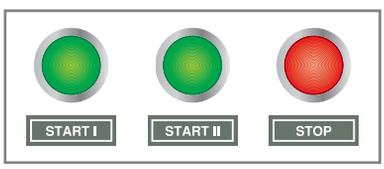

Burner



Burner Specifications	
Flow min-max.	4 - 9.8 kg/h
Thermal power min-max.*	40.8 - 99.9 Mcal/h
Thermal power min-max.*	47.3 - 116 kW
Fuel	LIGHT OIL 1.5°E a 20°C = 6.2 cSt
Intermitted working operation	1 stage (min. 1 stop every 24 hours)
Environmental conditions operation/storage	-15 +40°C, rel. humidity max 80%
Max temperature combustion air	60 °C
Nominal electric power	140 W
Motor fan	100 W
Nominal absorption	0.7 A
Power supply	1/N ~ 230V- 50Hz
Degree of electric protection	IP40
Noisiness** min-max	59 - 61

** Reference conditions: Environment temperature 20°C - Barometric pressure 1013 mbars - Altitude 0 mt (sea level)*
*** Measured sonorous pressure in the combustion lab, with functional burner on beta boiler in a distance of 1 m.*

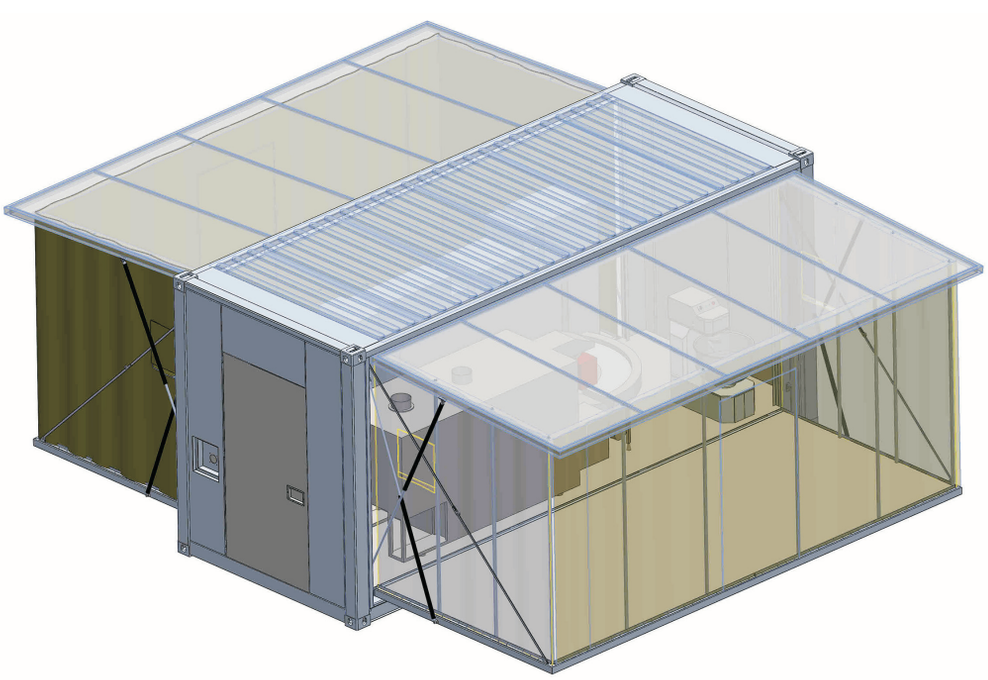

Components

Line is composed of four main components; divider, tunnel proofer, final proofer, cooling conveyer and oven

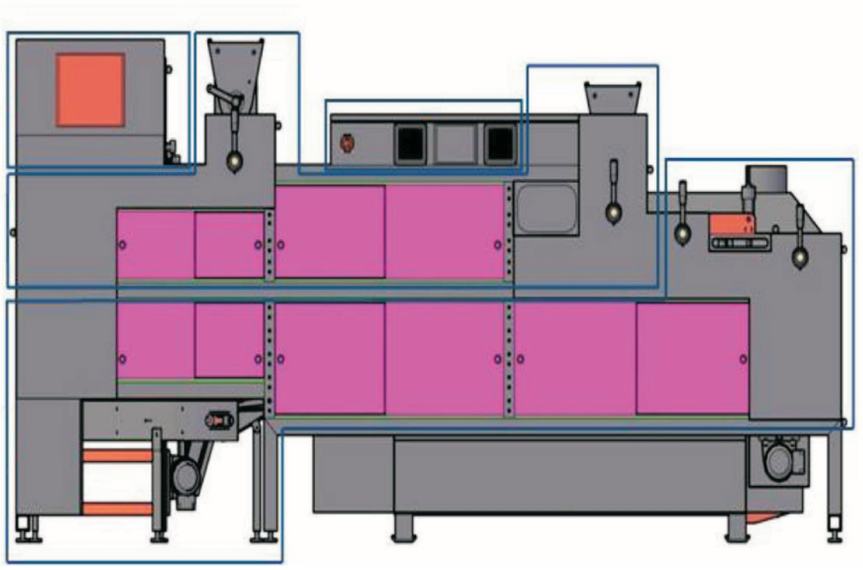

All components are connected to the same control unit, composed of a PLC and a Touch screen. These units are used to run the machine, determine the alarms, specify the quantity of loaves per minute, specify fermentation time per minute, specify baking time per sec, and specify the length of loaf. All the components are dependent, so that, if there is alarm in one of them, all the components stop is till the defected one are turned off.

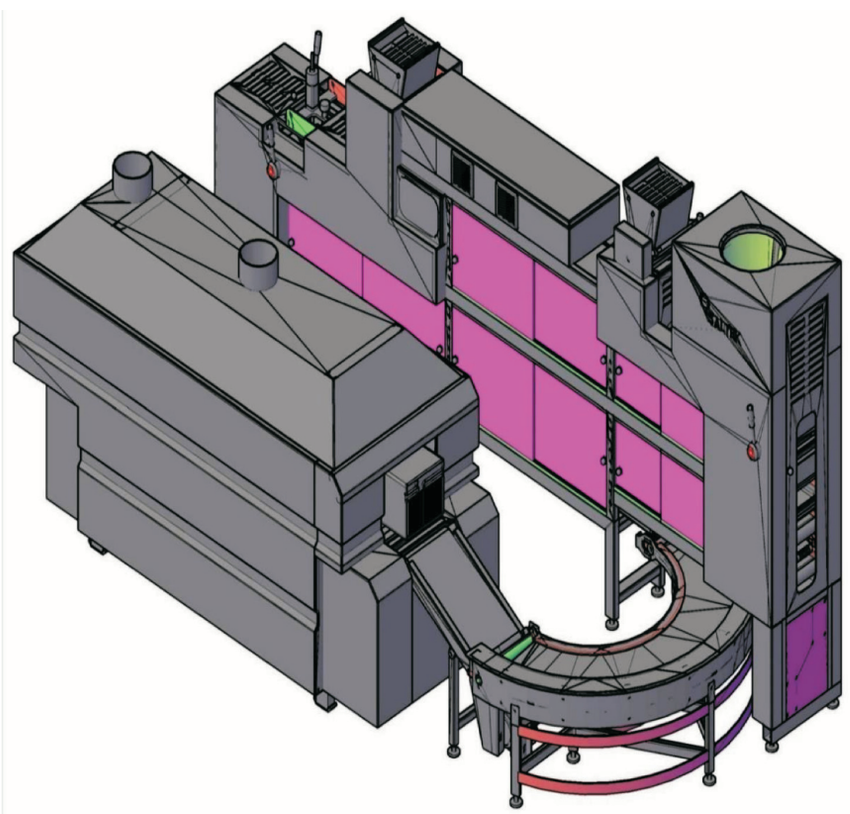

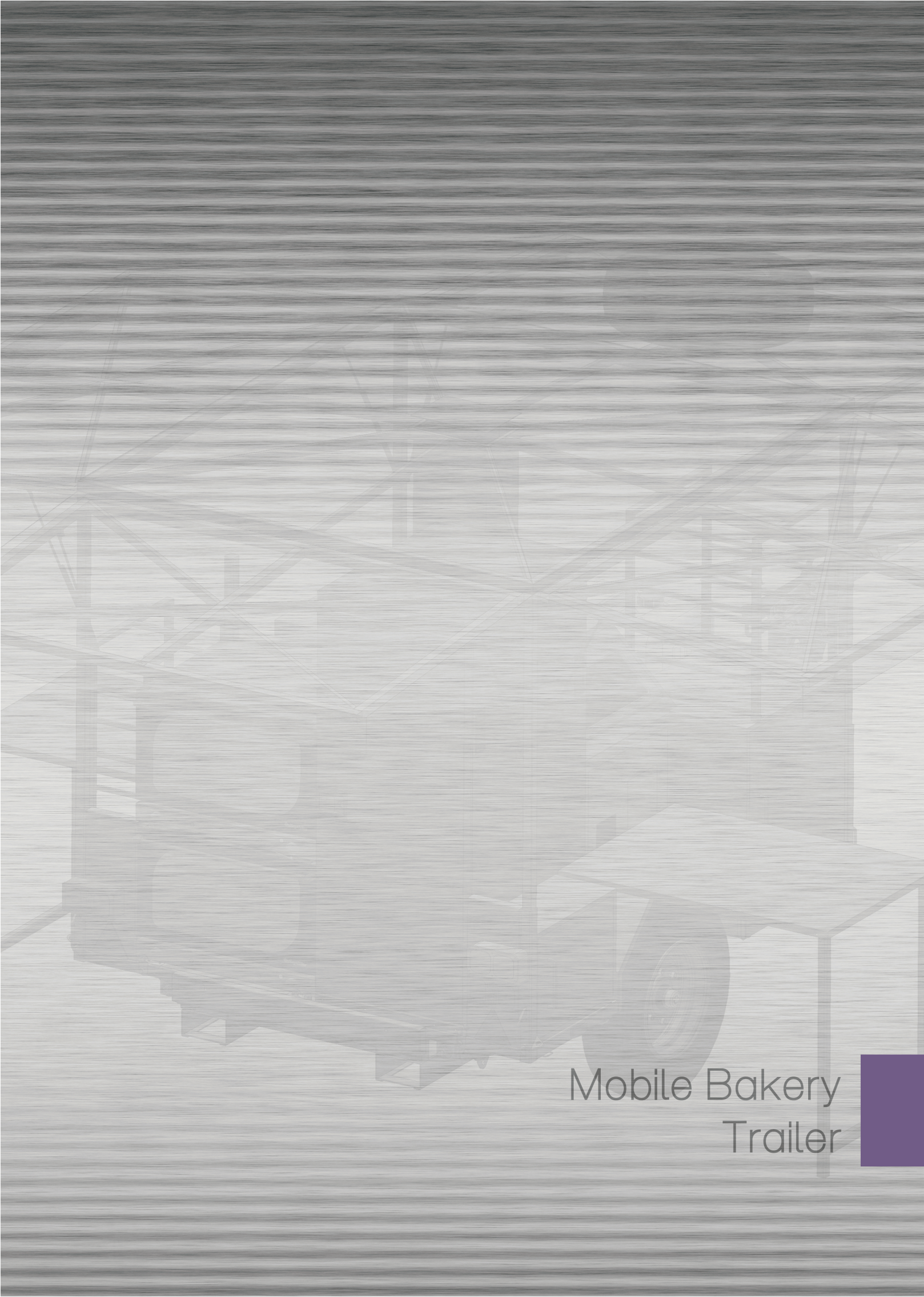

Mobile Bakery Trailer

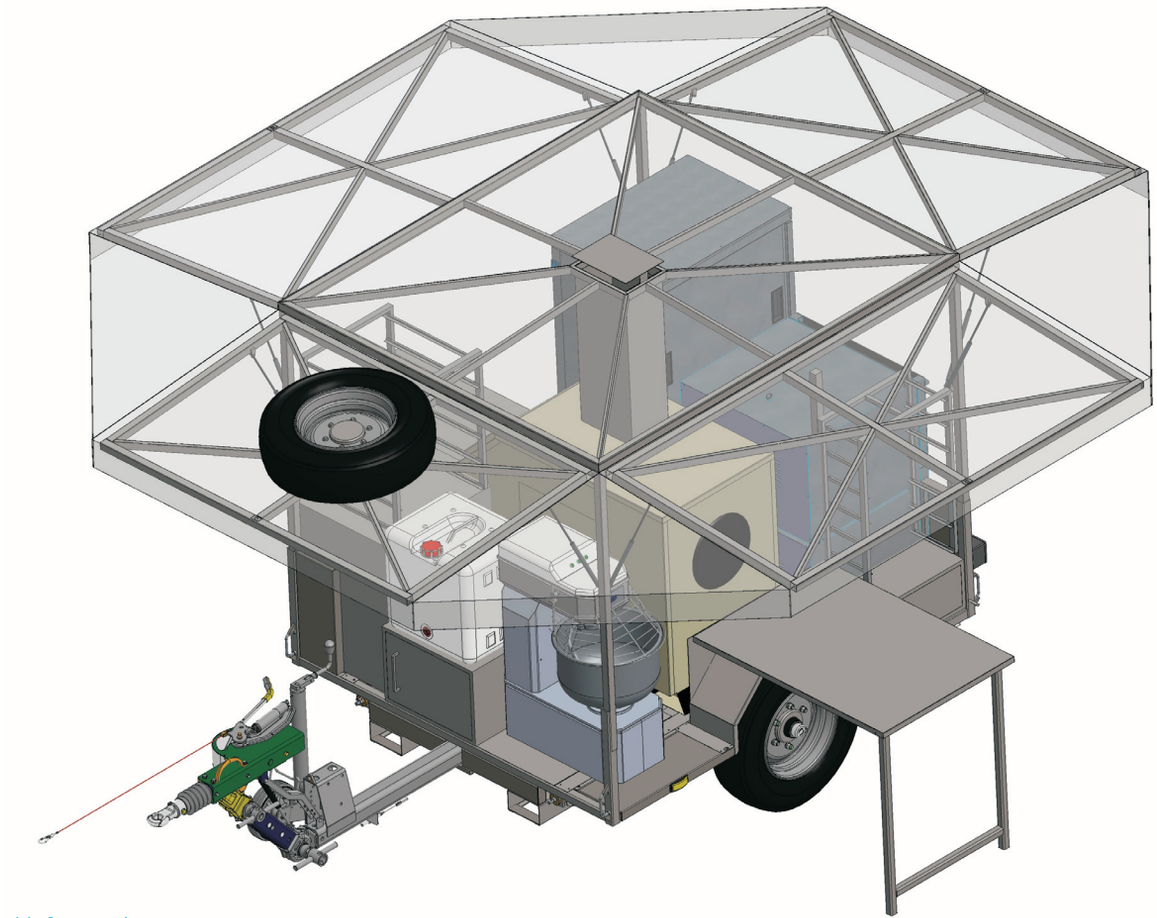

General information

The Mobile Bakery Trailer is designed to make bread for troops, groups and community on temporary field duties. Bakery has capability to serve 250 persons on the field.
The Mobile Bakery includes various components to prepare and bake the bread: Kneading, scaling, shaping, fermentation, baking and natural cooling units.
Bakery has soundproofed diesel generator set in order to obtain autonomy.
The Mobile Bakery Trailer is mounted on a single axle trailer and can be safely transported by land, air and sea transportation vehicles by the help of appropriate equipment

	Description
1	Dough kneader
2	Workbench
3	Generator Set
4	Electrical ovens (2 pieces)
5	Fermentation chamber
6	Water station and depot
7	Cupboard & Stacking shelves

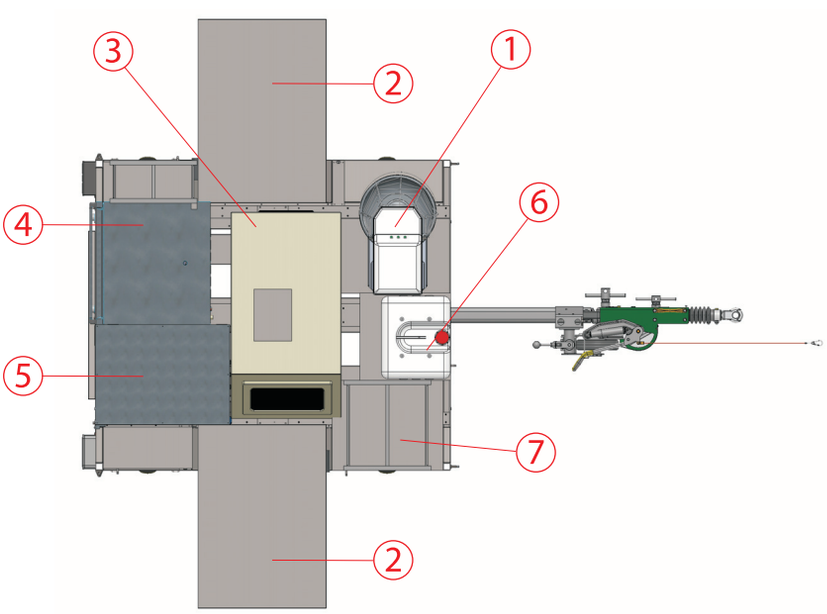

CE E7

Common features

Dimensions & Weight	
Operation dimensions	5,430 mm (L) x 4416 mm (W) x 2490 mm (H)
Transportation dimensions	4,320 mm (L) x 2070 mm (W) x 2490 mm (H)
Total weight	2,000 kg

Bakery units	
Dough kneader	• 30 kg maximum dough production capacity. • Supported by transparent water depots to supply continuous water to the kneader. • Adjustable speed • High quality stainless steel bowl and mixing accessories
Oven	• 2 pieces of electric ovens, with ventilation and extractor fan. • Manual steam by electric pump and water depot. • Inner side of oven is made of high quality stainless steel.
Fermentation chamber	• Chamber is made of high quality stainless steel. • Operating temperature up to +70° • A thermostat helps to manage the temperature.
Scale	• Range: 6 kg. • Stainless steel scale

Trailer	
Trailer Structure	Hot-dip galvanized body structure. Rubber suspension axles.
Main Chassis	Welded torsion-resistant steel profiles.
Axles	1 Axles
Wheels	2 + 1 Tires - 8.5 R 17.5
Capacity	2600 kg
Suspension	Independent gas absorber suspension
Electrical Systems	Traffic lights according to regulations
Towing eye	NATO or DIN, adjustable height
Brakes	Mechanical brake system

Generator set	
Power	22.3 kVA power in stand by, 1500 RPM.
Voltage and frequency	380 V, 50 Hz
Motor type	Diesel, 4 stroke, air cooling
Socket	16A connection socket
Control	Via control board, automatic start

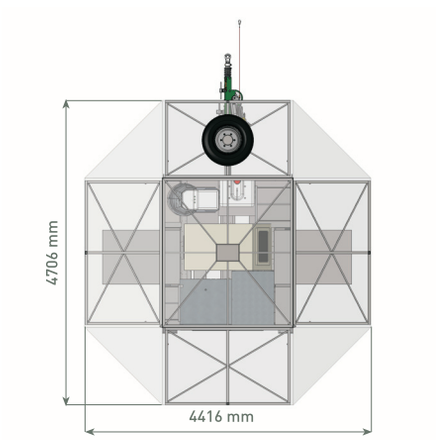

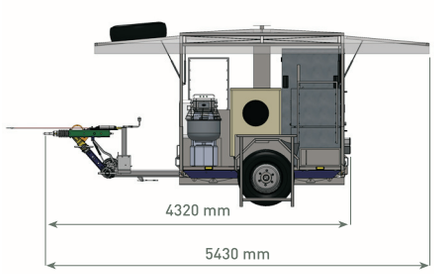

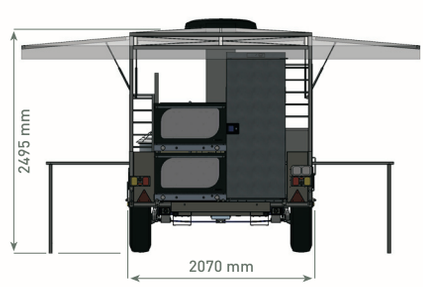

Tent / Tarpaulins

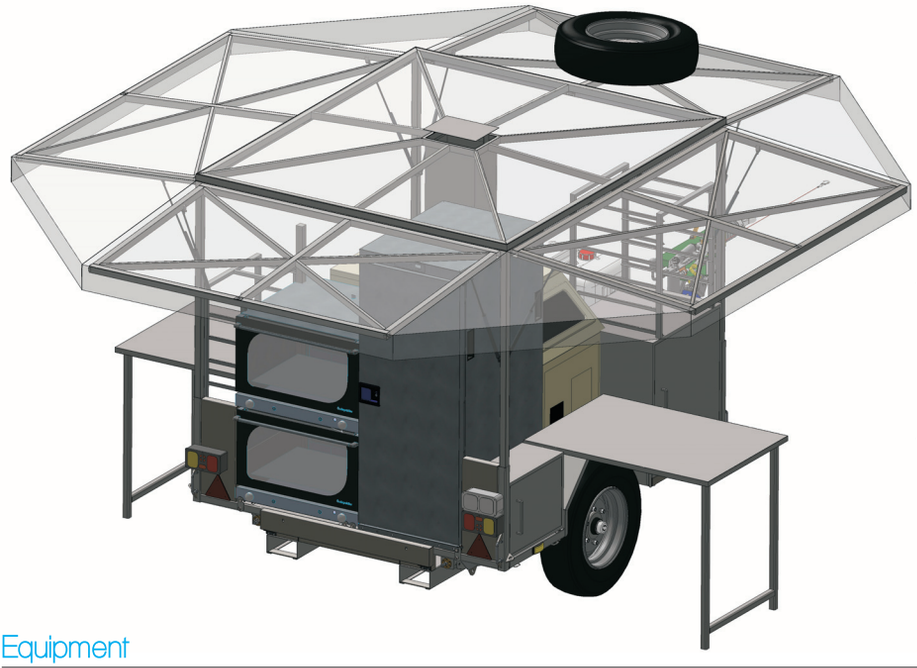

Roof equipment includes:
- Four sides and a roof,
- LED lighting system,
- 8 x Gas shock absorbers (2 per side),
- Chimney with cap.

Equipment



Electrical Oven:
- Oven chamber and structure is made of stainless steel.
- Each has 4 trays capacity.



Dough Kneader:
- The Mobile Bakery Trailer is equipped with one dough kneader machine.30 liter bowl capacity



Fermentation Chamber:
- Fermentation chamber and external structure is made of stainless steel
- Operating temperature up to +70°C
- Capacity of 20 pieces of 400x600 mm tray



Generator Set:

Specification	Description
Power (Stand by)	22,3 kVA
Power (Prime)	20,3 kVA
Voltage	380 V, 50 Hz
Engine	Diesel fuel, air cooling
Engine revolution	1500 rpm
Fuel tank capacity	75 liters
Fuel consumption	6,1 liters/hour
Engine oil capacity	7 liters



Laundries

Laundry Trailer



Ozti Laundry Trailer is a contemporary solution consists of a complete laundry room on a highly mobile trailer. Field laundry is designed to meet the hygienic clothing needs of the modern army troops, civil defense organizations and the disaster relief groups under hardest conditions. With the integrated diesel generator set and diesel water heaters, it is independent. And it is strong enough to clean and dry up to 25 kg's of laundry in an hour.

Extra washer extractor and tumble dryer are mainly designed to perform the most demanding washing tasks in the field. Inner / outer drum and parts coming into contact with chemicals are constituted from 304 / quality stainless steel. In the extractor, 5 electrically controlled chemical in take compartments allowing powder or liquid chemicals are provided standard. High speed extraction force of 300 G ensures the savings from drying time. Aluminium alloyed main pulley helps the drive system by reducing the loads come onto the motor. Newly introduced control system includes 50 reprogrammable cycles where 13 of them are already programmed. All automatic steps can be interrupted and controlled manually. Main problem with the washer extractors is, homogenous wetting of loundry and chemical distribution during water intake. As most of the machines start rotating in the some time with water intake process. This ensures homogenaus distribution of wather and chemical which provides best washing result. New balance weight system comprised from st 37 steel, serves for a long time as it does not crack or break like concrete balance weight system.

Washer Extractor



A heavy duty washing machine with stainless steel drum and main body, newly developed electronic control system with reprogrammable 50 washing programs and specially designed hot water intake system from the water heating system.

Capacity	25 kg / h
Drum Volume	254 lt
Drum Diameter	762 mm
Drum Depth	460 mm
Door Diameter	475 mm
Washing Motor Power	4 kW

Special Features

Hot water needed for extractor ensured by a special diesel burner with a power of 35 kW.

- Fully stainless steel outer structure.
- Stainless steel inner and outer drum.
- 300 G extraction force.
- Single motor drive with inverter frequency control.
- Developed springs and shock absorber.
- St-37 steel balance weight system.
- Maximum control panel.
- Cool down.
- Aluminium main rim system.
- Cd, tse and iso 9001-2000.
- 50 Programmable recipes (13 stabie and reprogrammable, 99 steps each)
- Adjustable drum speed.
- Adjustable extraction speed.
- Adjustable water temperature.
- Adjustable water level.
- Adjustable washing time.
- Manual interference during the process.
- Manual operating of each step.
- Logging of last 30 errors.
- Tracing of each washing step by leds.

Tumble Dryer



Specially designed diesel burner with a power of 25 kW ensures the hot air required by tumble dryer.

Capacity	30 kg / Cycle
Cycle Time	35 min.
Drum Volume	605 lt
Drum Diameter	970 mm
Drum Depth	820 mm
Spinnig Motor Power	0,75 kW

Special Features

Hot air needed for extractor ensured by a special diesel burner with a power of 25 kW.

- Stainless steel perforated inner drum
- Direct hub – shaft and belt drive system
- Computerized time and heat adjustment
- Fully programmable electronic control
- Bidirectional rotation
- Thermostat
- Safely door switch
- Cool down
- Engineered dessign occupies less area
- Large and easily cleanable int fitters
- Lubrication from single point
- Newly designed stainless steel door and hinge
- 80 % of construction without welding
- Electrostatic painted



Containerized Laundry



Ozti Containerized Laundry is a contemporary solution consists of a complete laundry room in a 20' Container. Containerized Laundry is designed to meet the hygienic clothing needs of the modern army troops, civil defense organizations and the disaster relief groups under hardest conditions.It is strong enough to clean and dry up to 50 kg's of laundry in an hour.

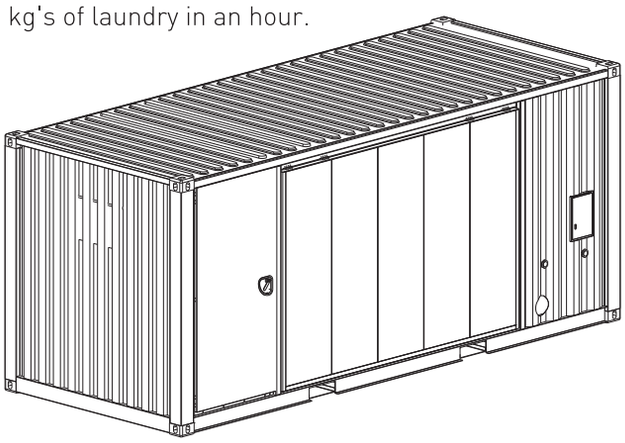

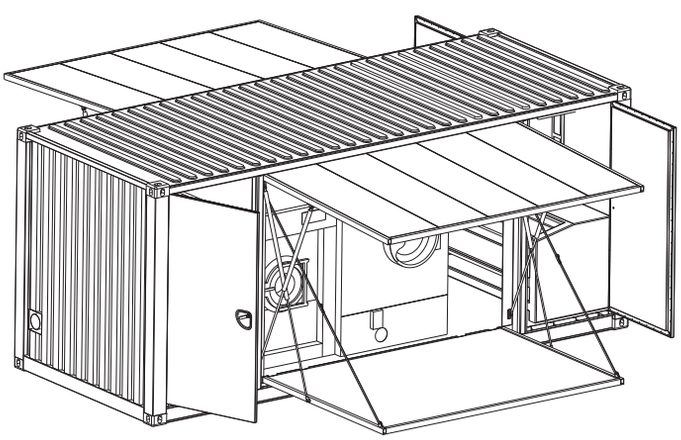

Transport Position

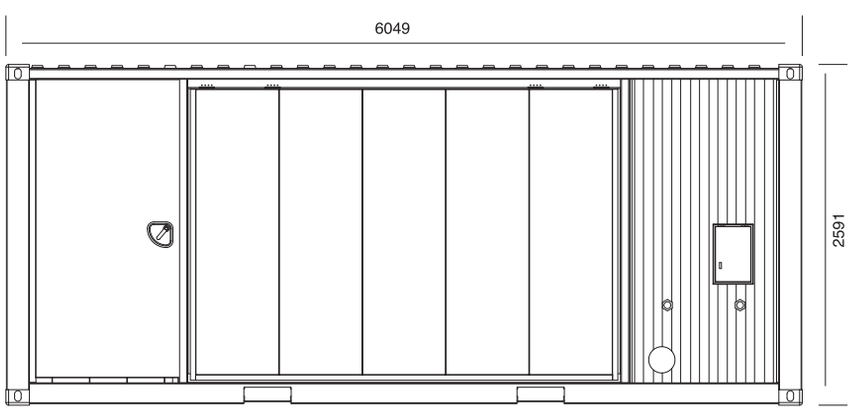

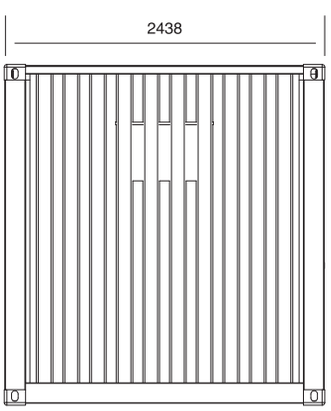

Net weight: 7340 Kg



Washer Extractor

A heavy duty washing machine with stainless steel drum, drum and main body, newly developed electronic control system with reprogrammable washing programs.

- Fully stainless steel outer structure
- Stainless steel inner and outer drum
- 300G extraction force
- Single motor drive with inverter frequency control
- Developed springs and shock absorber
- St-37 steel balance weight system
- Maximum control panel
- Cool down
- Aluminum main rim system
- CD,TSE and ISO 9001-2000
- Adjustable drum speed
- Adjustable extraction speed
- Adjustable water temperature
- Adjustable water level
- Adjustable washing time

ELECTRICAL SPECIFICATIONS

Capacity	Motor	Resistance	Total Power		Fuse Type		Cable Type	
			Electric	Steam	Electric	Steam	Electric	Steam
50 kg	7.5 kW	24 kW	29.5 kW	5.5 kW	3 x 63 A	3 x 32 A	4 x 10 NYY	4 x 6 NYY

WATER AND STEAM SUPPLY SPECIFICATIONS

Capacity	Water Inlet	Steam	Drain	Water and Steam Pressure		Water Consumption	Electrical Power
				Max	Min		
50 kg	2 x 1"	1"	2 1/2"	4 bar	2 bar	810 lt	29.5 kW

Tumble Dryer

- Stainless Steel perforated inner drum
- Direct hub-shaft and belt drive system
- Computerized time and heat adjustment
- Fully programmable electronic board
- Bidirectional rotation
- Thermostat
- Safely door switch
- Cool down
- Engineered design occupies less area
- Large and easily cleanable int fitters
- Lubrication from single point
- Newly designed stainless steel door and hinge
- 80% of construction without welding



ELECTRICAL SPECIFICATIONS

Capacity	Total Power		Resistance	Fuse Type		Cable Type	
	Electric	Steam and Gas		Electric	Steam	Electric	Steam
1500 lt	2.2 + 3 kW	2 x 3 kW	42 kW	3 x 100 A	3 x 32 A	4 x16 NYY	4 x4 NYY

STEAM AND GAS SUPPLY SPECIFICATIONS

Capacity	Gas Inlet	Steam Inlet	Water and Steam Pressure		Cable Type	
			Steam	Steam	Electric	Steam
1500 lt	3/4"	1"	2-4 bar	40 mbar	140 kg/h	6.4 m^3/h

Flatwork Ironer



- Electrical specification for all machines is 380 ± 10% V 50 Hz ± 2%.
- Exhaust blower to exhaust out the dumpy air occur
- Thermostat
- Cool down
- Different heating type options
- Electronical control system
- Stainless steel cylinder
- Stainless steel fabric storage

Dimensions	Cable		Fuse		Steam Inlet	Condenser Outlet
	Electric Heated	Steam and Gas Heated	Electric Heated	Steam and Gas Heated		
320 x 1500	4 x6	3 x 2.5	3 x 40 A	1 x 16 A	1"	1/2"











Ablution Systems



Mobile Sanitary Unit serves for people to perform their basic hygienic needs in field conditions. It is built in a ISO 20' container. The configuration can be modified according to special requirements. The container has a separate engineering area for control panel, diesel driven water heating system, pumps and 15kva generator. Water heating system has a capacity of 2000 l/h warm water. The system is independent and complete with its clean/dirty water tank. All sanitary components and accessories are made of stainless steel. The Mobile Sanitary Unit can also be designed on a trailer

The configuration of 3 shower units and 3 toilets fits in an insulated 20ft ISO container can cover all your sanitation needs.

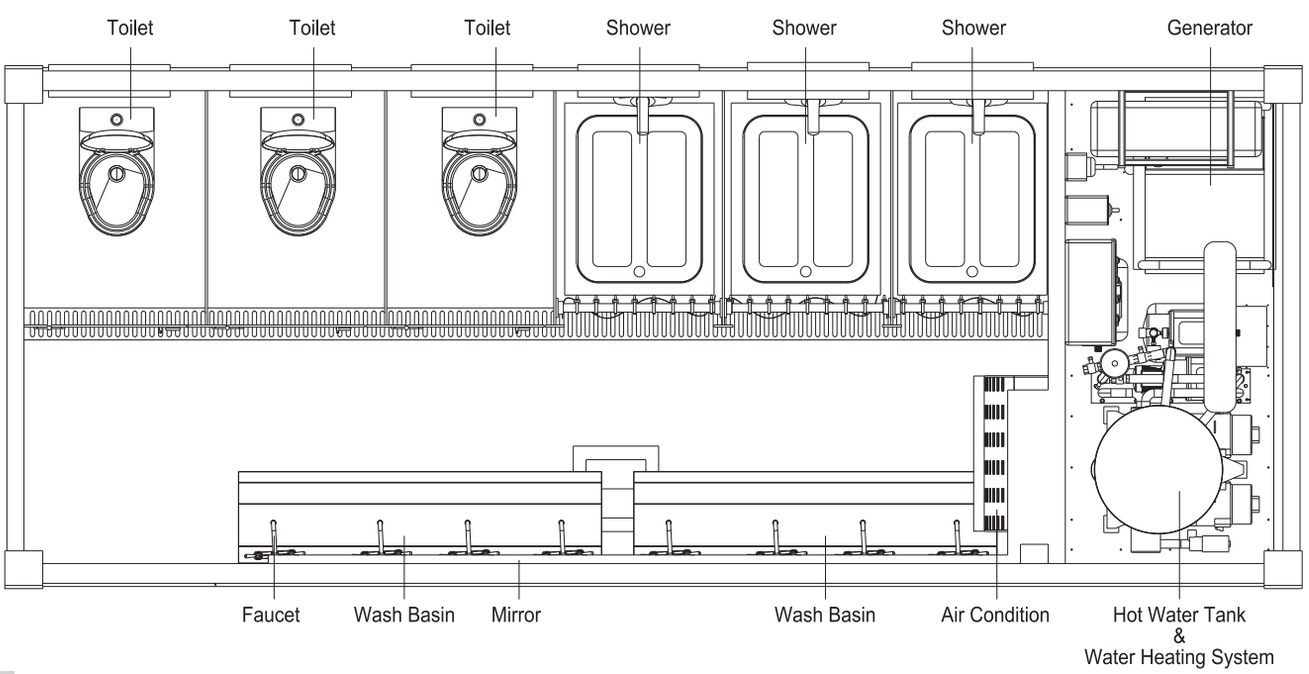



The container has a separate engineering area for control panel, water heating system and power generator. Water heating system is operated with diesel fuel and has a capacity of 2000 l/h warm water.

The system is independent and complete with its clean/dirty water tank.

Shower



Shower trays are made of stainless steel. Shower heads can be used both fixed or hand-held. Every shower area is protected by side walls to ensure privacy.



Wash Basins



Extended stainless steel wash basins allows you to wash also your equipments easily. The washbasins area has 8 mix taps for cold & warm water, mirrors, soap dispensers and 230V sockets.

Toilet



Stainless steel toilet units supported by stainless steel accessories to achieve maximum hygiene and durability. Every toilet area is protected by side walls to ensure privacy.

Climate Control



High performance air condition unit used for heating, cooling and ventilating the life space.

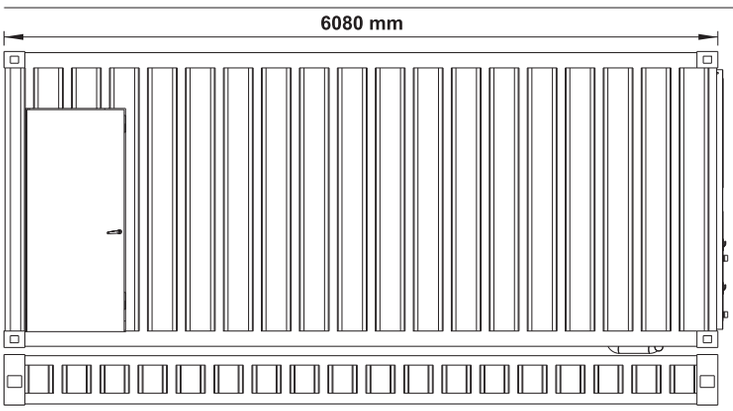

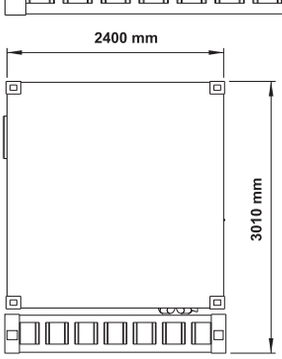



Optional "Heated Field Tent" for dressing room

TECHNICAL FEATURES	
Container dimensions (L x W x H) mm	6080 x 2400 x 3010
Door openings dimensions (L x W x H) mm	7200 x 3270 x 3010
Weight – empty (kg.)	3500
Weight – water tanks full (kg.)	6500
Height of life space from ground - mm	510
Dimensions life space (L x W x H) mm	4650 x 2225 x 2400
Shower quantity	3
Toilets quantity	3
Wash basin quantity	2
Faucet quantity	8
Mirror quantity	8
Hot water tank capacity (lt.)	250
Clean water tank capacity (lt.)	1000
Waste water tank capacity (lt.)	2000
Heater capacity (kW)	2 x 35
Fuel	Diesel
Fuel consumption max. (lt. / h)	2 x 4,5
Fuel tank capacity (lt.)	100
Power generator	7,5 kVA / 230 V / 50 Hz
Generator fuel consumption (lt. / h)	2,4
Air condition capacity (Btu)	9000



The configuration of 4 hole-in-the-floor toilets that has ability to become shower units by using the stainless steel shower trays , 4 sink units and 1 ablution unit fits in an insulated 20ft High Cube container which can cover all your sanitation needs.

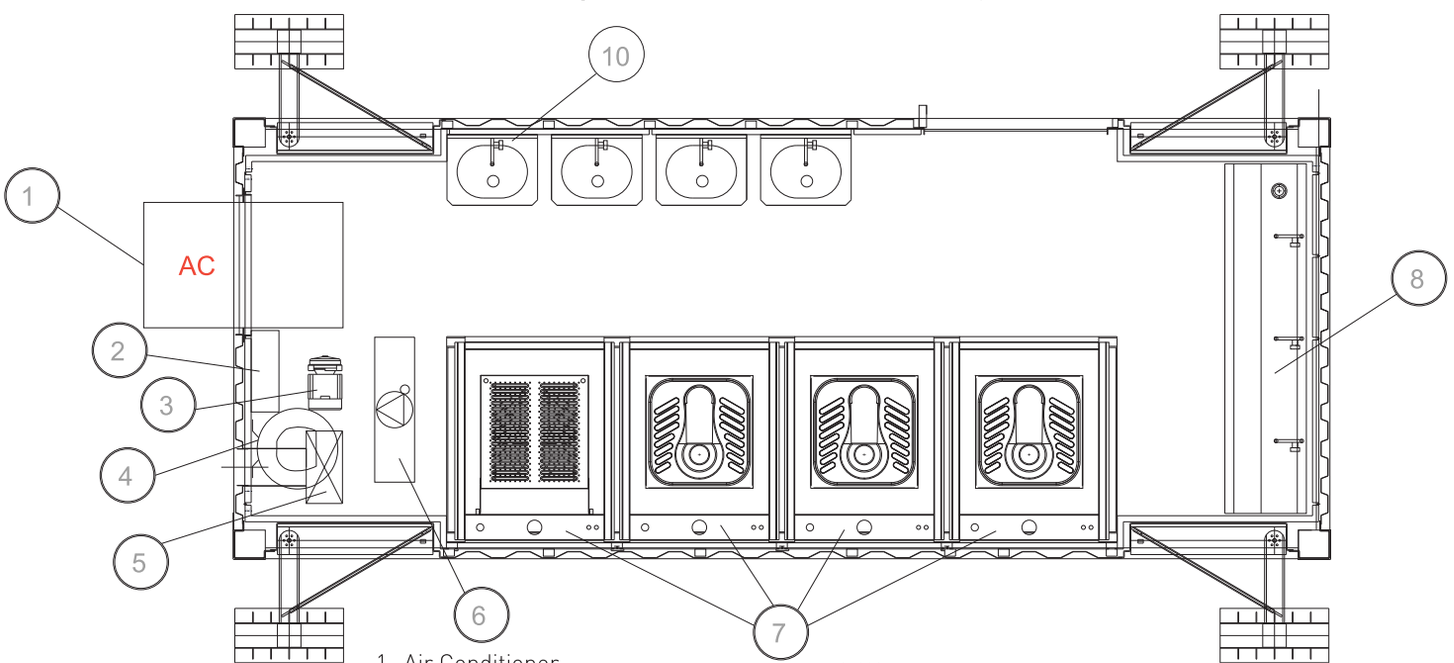

1- Air Conditioner
2-Electrical Control Panel
3-Clean Water Pump
4-Boiler
5-Air Ventilation Fan

6-Waste water pump
7-Toilet & shower units
8-Ablution Unit
9-Landing Jacks
10-Sink Units

Hand Washing Sink



4 Stainless steel hand washing sinks with Mix taps with cold & hot water and mirrors allows you to complete your daily care.

Ablution Unit



Extended stainless steel ablution unit is designed for your comfor and you can also use the unit for washing purposes.

Toilet & Showers



Hole-in-the-floor toilets and shower trays are made of stainless steel. Each toilet can become a shower using the stainless steel shower tray. Every toilet & shower has a fixed shower head and a lustration spray unit. Each toilet & shower area is protected by stainless steel side walls to ensure privacy and hygiene.

Climate Control



High performance air conditioning unit is used for heating and cooling of the living area.The air conditioner has a maximum cooling capacity of 4.9 kW which is performed as a combination of sensible and latent cooling. The air conditioner can adopt to ambient temperatures from -32°to +60°C.

Climate Control



High performance air condition unit used for heating, cooling and ventilating the life space.

TECHNICAL FEATURES	
Container Dimensions (L X W X H) Mm	6058 x 2438 x 2896
Weight – Empty (Kg.)	5150
Toilet & Shower Quantity	4
Ablution Unit Quantity	1
Hand Washing Sink	4
Mirror Quantity	4
Boiler Capacity	100 L
Air Conditioner Capacity (Btu)	16700

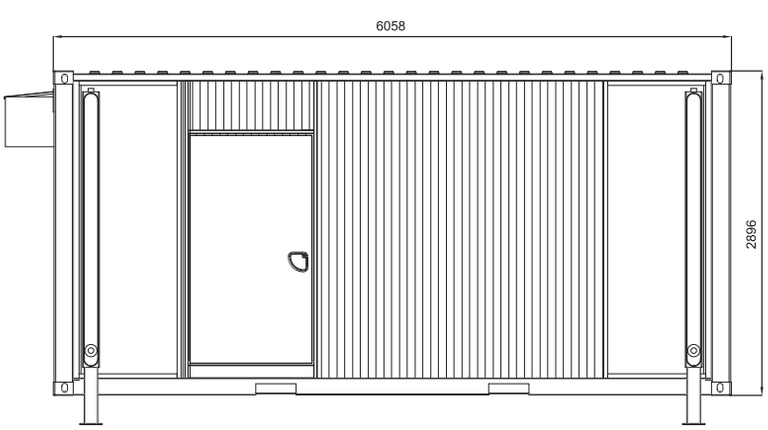

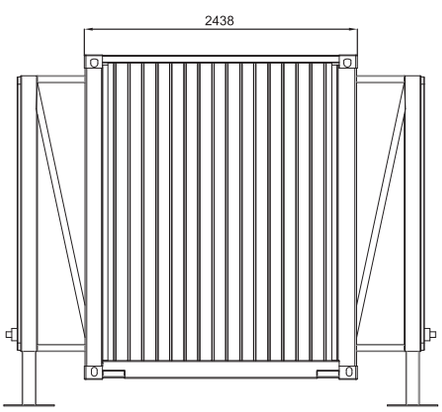

Ablution Container 6+6

General information



20ft Ablution Container is installed inside a 20 ft ISO1CC container and equipped with 6 shower cabin, 6 water closet and 4 wash basins which are accessible from outside to serve personnel on the field. Required hot water for the showers is obtained from a high capacity electrical water heater.
Following resources and equipment are required to use the ablution container:

- Power source: A generator set or mains electricity with three phase 63A connection is required to run the system.
- Water source: Clean water source is required to use in the showers, water closets and wash basins.
- Waste water depot: It is recommended to use a depot to collect waste water.

Container can be safely transported by land and sea transportation vehicles by the help of appropriate equipment which is suitable for 20ft ISO container.

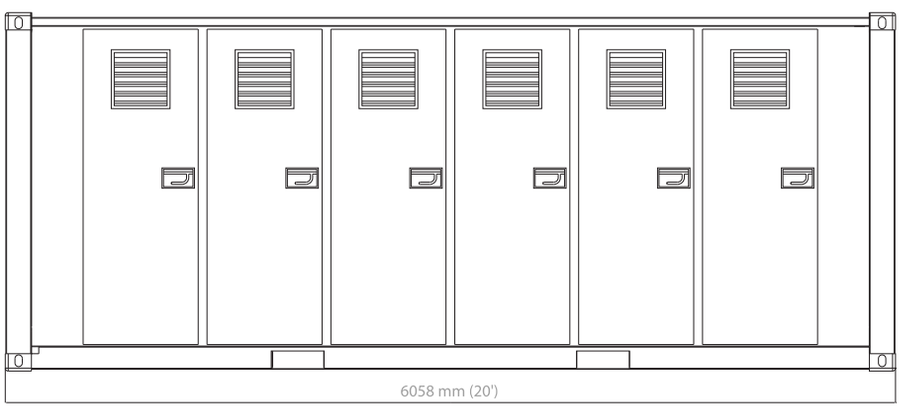

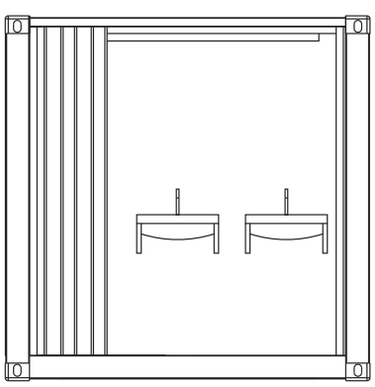

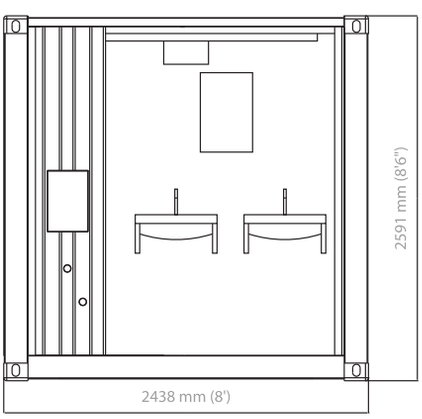

Specifications	
Dimension (L x W x H)	6058 x 2438 x 2591 mm
Water closet quantity	6
Shower quantity	6
Wash basin quantity	4
Electrical requirement	380 V AC 50 Hz, 63 A, three-phase,21 kW

Units and specifications







Living area
20ft Ablution Container contains 6 shower cabins, 6 water closet and 4 wash basins. In the technical room which is located at the rear of the container, contains clean water pump, electrical water heater mounted on the wall and a sewage pump inside the waste water depot.

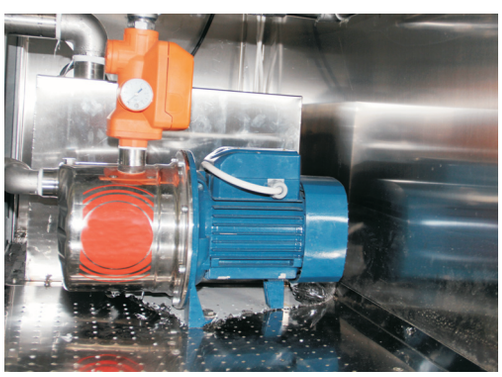

Technical room
In the technical room, which is located at the back of the container, there are installed technical equipment which are required to run and use the system.

Units			
1	Light button	5	Water pump
2	Circuit breaker box	6	Electronic pump controller
3	Water heater	7	Waste water depot
4	Liquid soap container	8	Clean water valve

Water heater
In the 20ft Ablution container, hot water requirement is provided by an electrical water heater.

TECHNICAL FEATURES	
Model	SIEMENS DE1821515
Power	18 / 21 kW
Water inlet temperature	4 - 55 °C
Adjustable water temperature range	20 - 60 °C
Hot water flow (38 °C / 60 °C)	9,9 / 6,6 l/min
Maximum flow rate	10 l/min
Protection	IP25
Voltage	400 V, three phase
Current	32 A
Others	LCD information screen Anti-lime system Safety pressure limiter Safety temperature limiter



Ablution Trailer



The Mobile Sanitary Trailer is designed to meet the vital needs like showering and hygiene of troops, groups and community on temporary field duties. The Mobile Sanitary Trailer can be safely transported by land, air and sea transportation vehicles by the help of appropriate equipment.

The trailer consists of 9 separate and identical showers. The showers are separated from each other by military standard canvases to ensure privacy. Each shower consists of a stainless steel shower tray, a stainless steel shower head and shower curtains made by resistant fabric. Shower curtain hooks and hanger pipes are made by stainless steel. 60 persons in 1 hour /9 minutes per person capacity.



Toilet & Showers

Hot water and energy used by the shower trailer is supported from the technical room.The technical room consists of water pumps, water heating system, a gen set and a water booster.

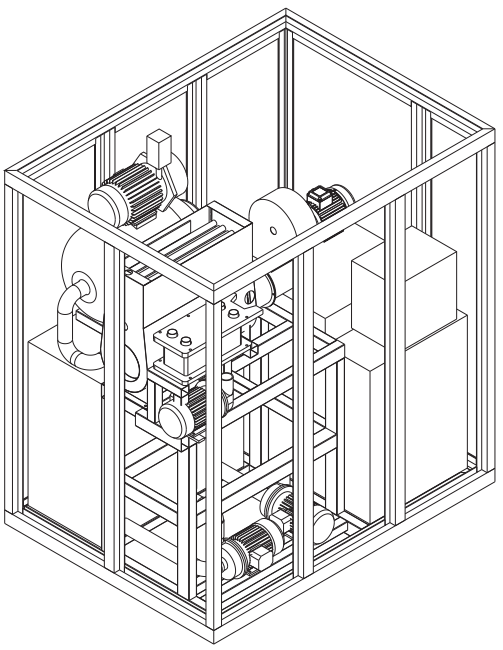

Plumbing

Water is supplied from an external source with a hose and a 0,75kW water pump. The hot water is produced using a 125 kW special design diesel burner and stored in a 200 liters water tank.
The hot water temperature in the 200 liters water tank is controlled with a thermostat placed on the central board.

Plumbing

- 7,5 kVA
- Single-phase
- 15 liters of fuel capacity (2,3-2,41 liters fuel consumption)
- 6 hours of fuel tank capacity

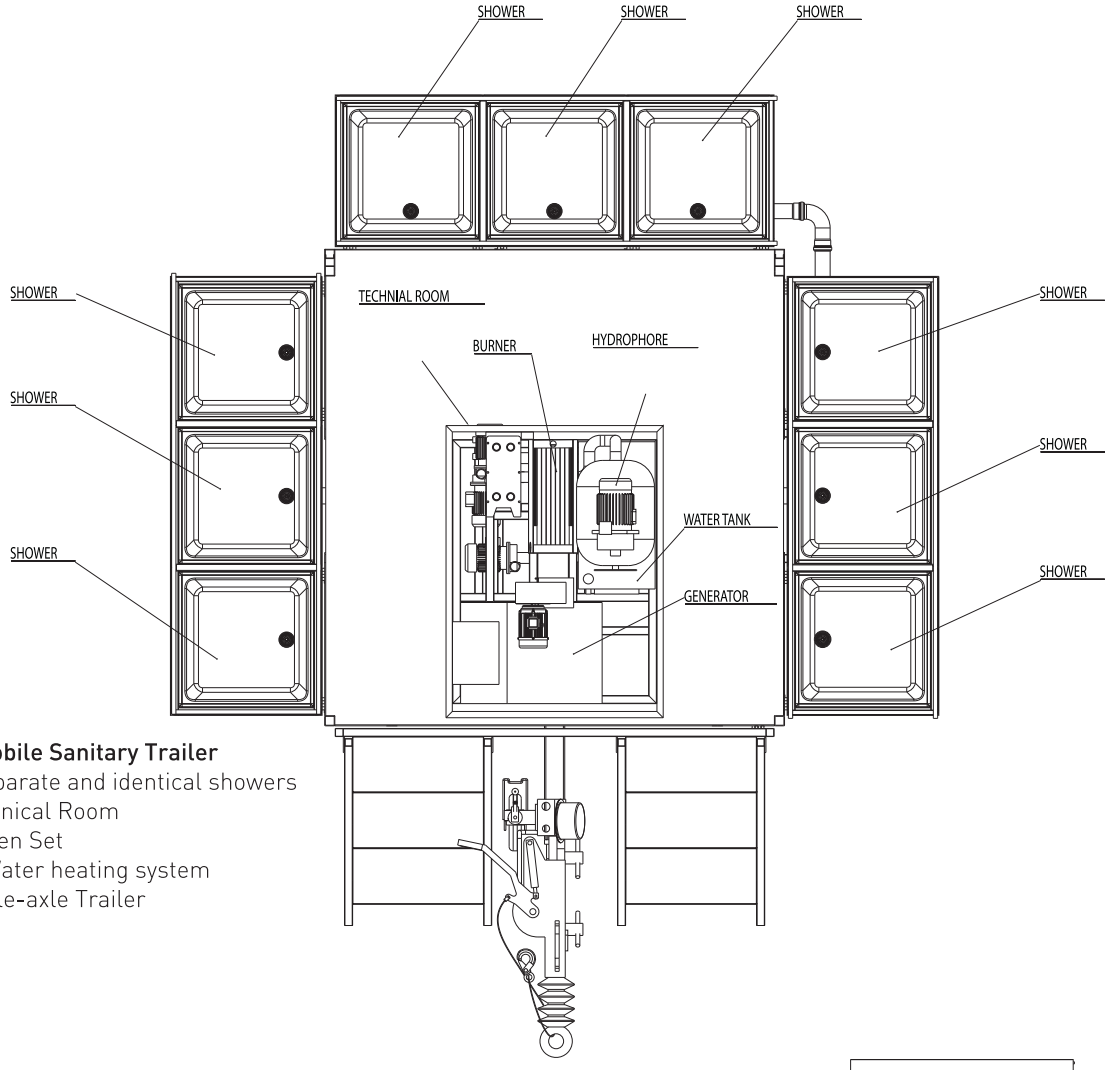

The Mobile Sanitary Trailer

1. 9 separate and identical showers
2. Technical Room
   - Gen Set
   - Water heating system
3. Single-axle Trailer
4. Tent

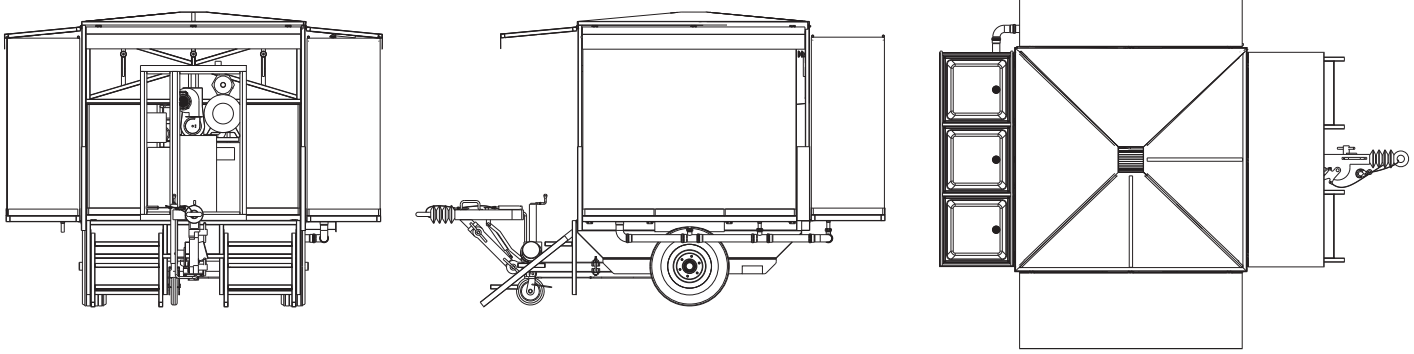

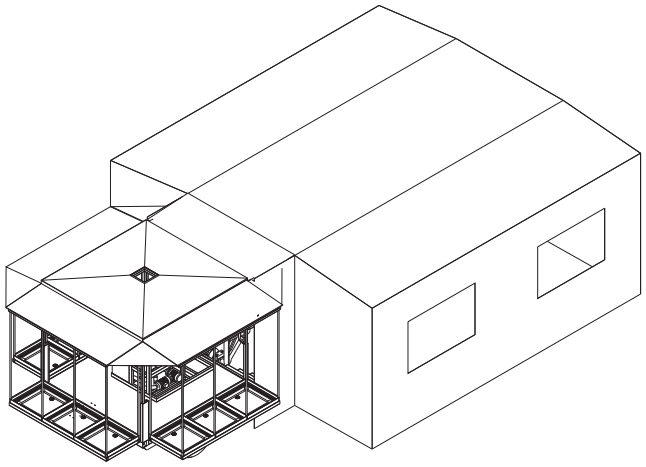

TECHNICAL FEATURES	
Capacity	60 persons in an hour / 9 minutes per Person
Setup time	30 minutes
Number os showers	9 separate / identical
Electrical connection	220-240 v - 50 hz
Water consumption	4000 liters per hour
Generator	7,5 kva single-phase, 15 l fuel capacity
Dimensions (mm)	3840 x 2240 x 2650
Operating dimensions (mm)	4775 x 3830 x 2950
Totatl weight (kg)	1930

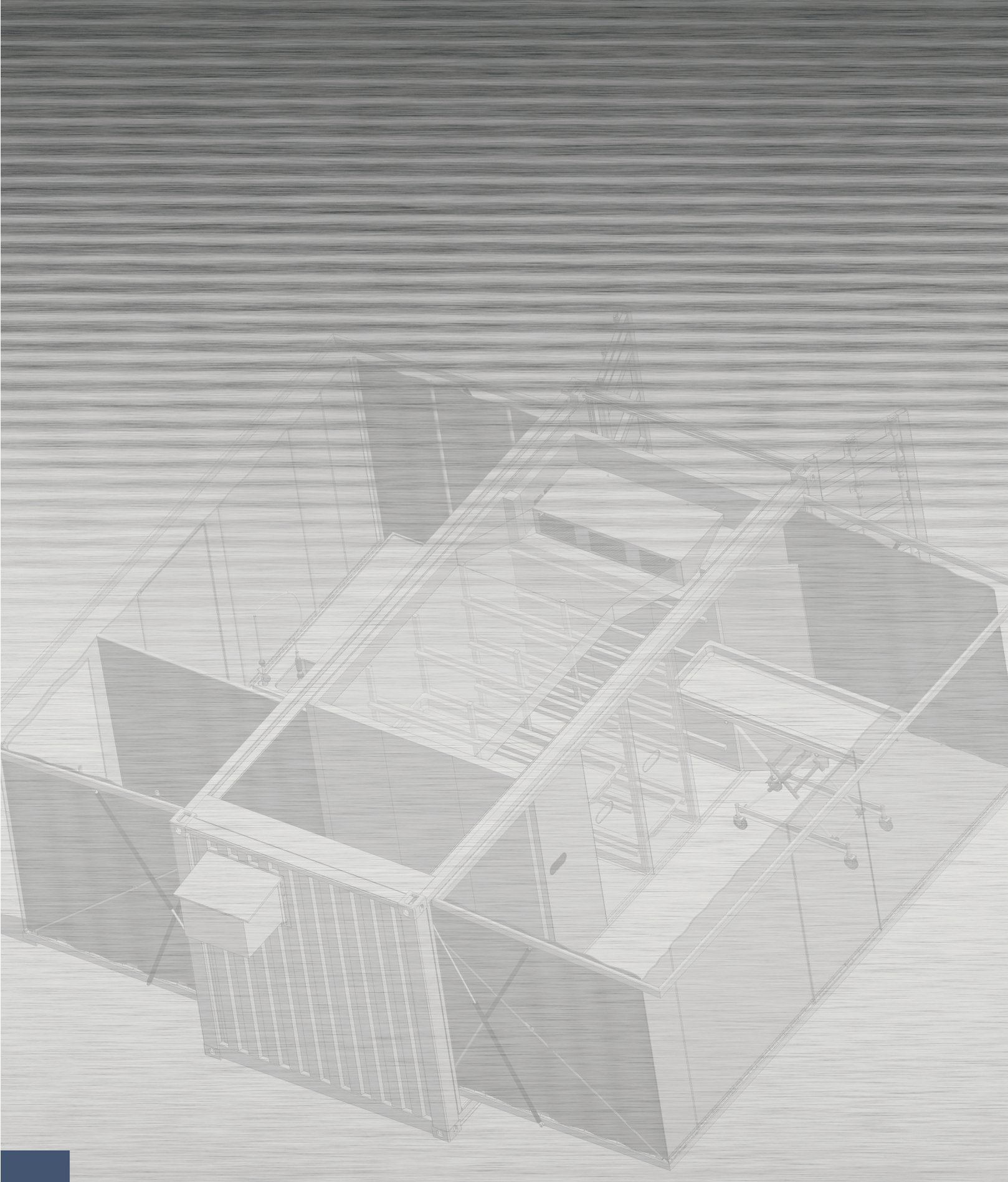

Mortuary Container

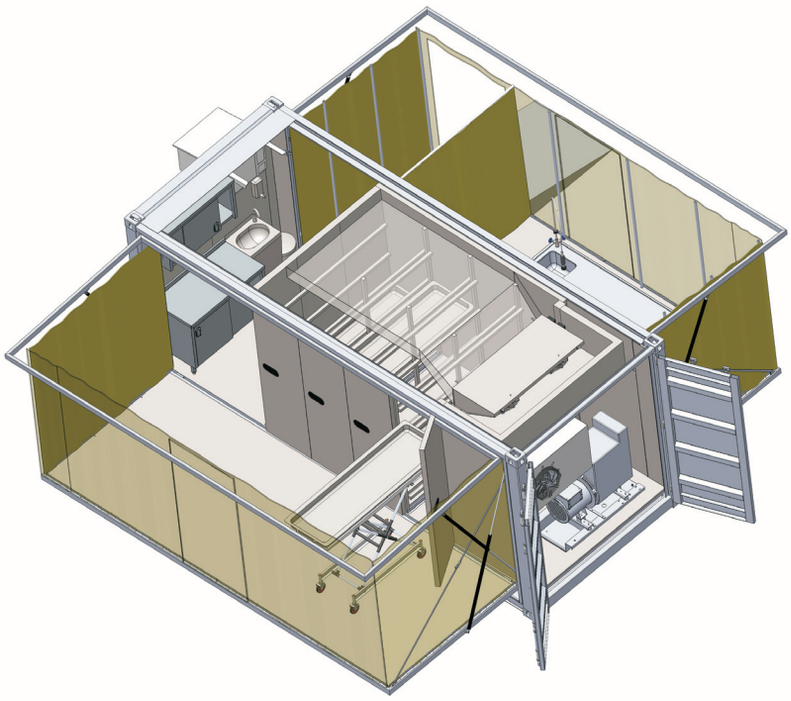

20ft Mortuary Container has a capacity to store up to 16 body trays in its cold room. All equipment including demountable stainless steel body washing table, height adjustable stretcher, foot controlled wash basin, workbench with storage, wall cupboard and an AC unit to climate inside of the container are installed into a 20 ft ISO1 CC container.
Inner walls and ceiling are made of stainless steel panels with insulation material to obtain maximum hygiene inside the mortuary. Floor is made of non-slippery pattern stainless steel sheets. Deployed container outer walls are made of high quality tarpaulin. Technical room contains a generator set to obtain autonomy.

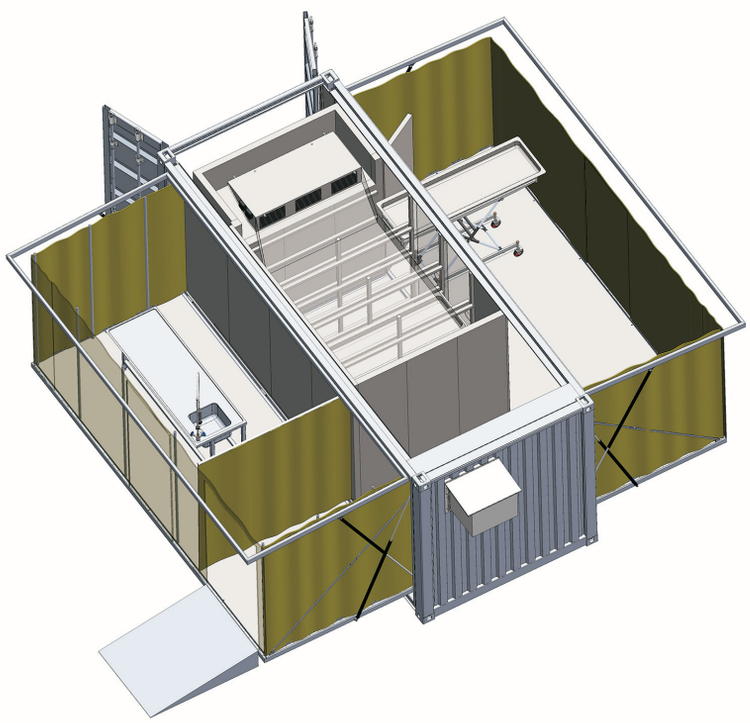

Dimensions (LWH): 6058 x 2438 x 2.591 mm (20' x 8' x 8.5')

Units		Generator Set		Air Conditioner	
Evaporator capacity	3190 W	**Power**	20 kVA (Prime)	**Model**	AC-M5
Condenser capacity	3370 W	**Engine type**	Diesel, four strokes, air cooling	**Cooling capacity**	4.7 kW maximum
		Fuel consumption	6,1 liters per hour	**Heating capacity**	2.0 kW

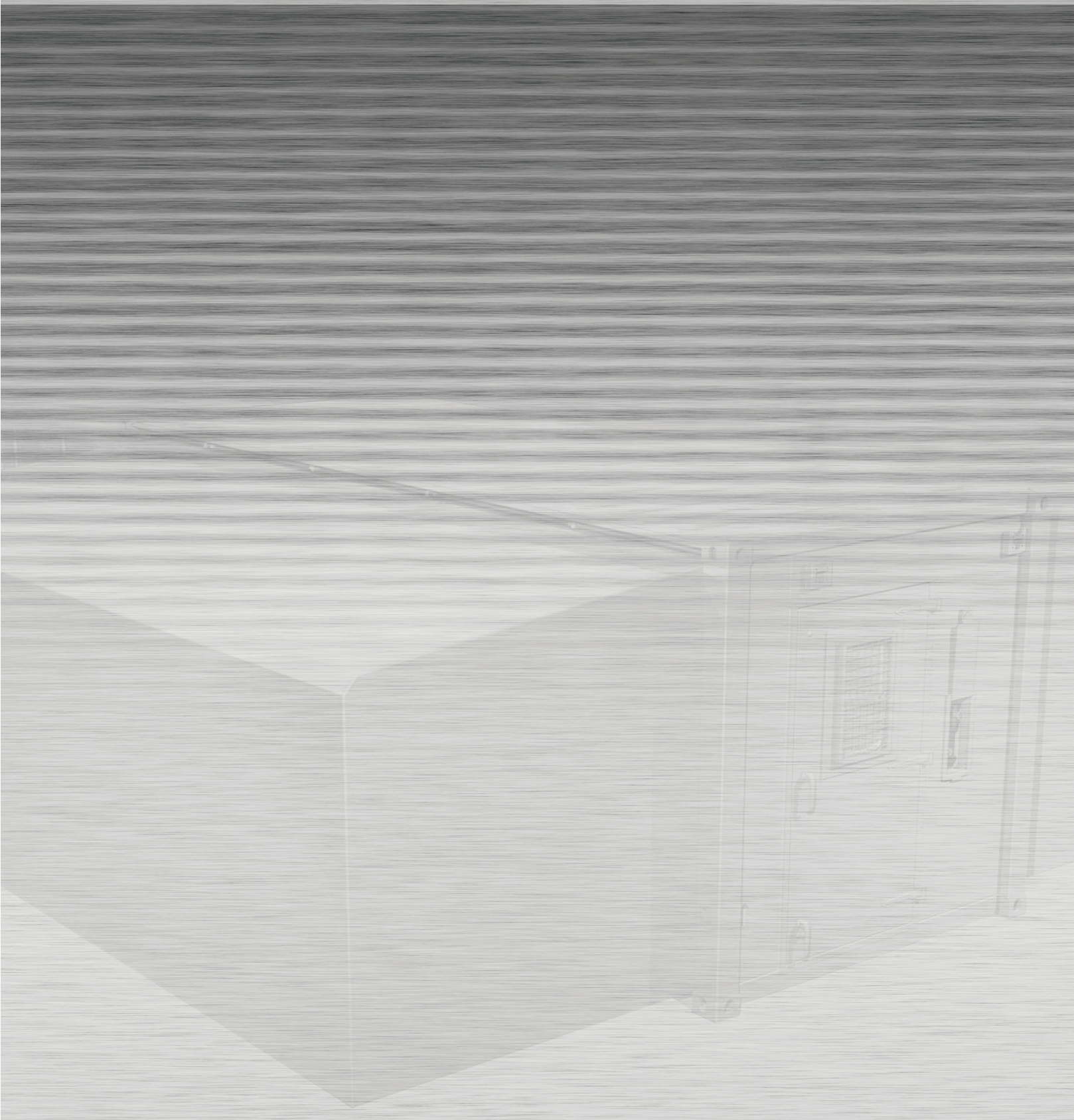

Ozti-Weatherhaven Container Systems



The MECC™ combines Weatherhaven fabric structure technology with the world's first standard in transportation – the ISO container. ishybrid design is ingenious yet simple.
The MECC™ shelter is a fully assembled and self-contained unit which offers end users the benet of three times the floor area of a conventional wood or steel constructed module that has the same shipping footprint. Deployment of this unit on site only takes minutes and does not require any special skills.
Transportation logistics for the MECC™ are unparalleled since it is based on the universal ISO shipping container. While in the ISO shipping container format, the MECC™ can be loaded for transport using forklifts, cranes, helicopters, PLS, bail bar, CHU or speciality jack stands. Shipment to end users is cost eective and convenient as the MECC™ can also be transported using trucks, trailers, rail, aircraft or ships including "roll on and roll off " and "container on at car.
Security issues and damage in transit are always of concern when shipping conventionally constructed modules. One of the major advantages of the MECC™ is that its rugged construction and heavy-duty latching and locking mechanisms make it resistant to both pilferage and cargo damage, thereby protecting valuable internal contents and reducing the possibility of a delay due to shortages of critical components.

Standard Specications

Each basic MECC™ includes the following standard features:
- Steel or aluminium construction
- Rugged steel or aluminium exterior
- Durable, weather resistant personnel door
- Anti-racking container locks
- Foam insulation in walls, oors and ceiling
- Vinyl-coated polyester and insulated cover in MECC™ wings
- Non-slip 2 mm PVC ooring
- Interior core wall and ceiling nish of plastic laminate panel
- Safety equipment and labelling for expandable deployment

- Deployment in minutes
- Deployed floor area is 3 times larger than transport area
- Designed to International Standards Organization (ISO) specications
- CSC certication for air, land or sea transport and stacking
- Insulated spacious interior
- Fully fitted out with electrical, mechanical, HVAC & furnishings

Model	Dimensions W x L x H	Basic Confg. Approx. Weight	Stacking Capability
MECC™ 20S	8' x 20' x 8' 2.4 x 6.1 x 2.4 m	8,500 lbs 3,856 kg	9
MECC™ 20S EX	8' x 20' x 8'6" 2.4 x 6.1 x 2.6 m	9,000 lbs 4,082 kg	3
MECC™ 20A	8' x 20' x 8' 2.4 x 6.1 x 2.4 m	7,500 lbs 3,402 kg	9

Model	Dimensions W x L x H	Basic Confg. Approx. Weight	Stacking Capability
MECC™ 20AS EX	8' x 20' x 8'6" 2.4 x 6.1 x 2.6 m	8,000 lbs 3,629 kg	3
MECC™ 20A	8' x 20' x 8' 2.4 x 6.1 x 2.4 m	5,500 lbs 2,495 kg	3
MECC™ 20A EX	8' x 20' x 8'6" 2.4 x 6.1 x 2.6 m	6,000 lbs 2,722 kg	3

S = steel structure, A = aluminium structure, AS aluminium wing structure with steel core structure, EX = extended height

Deployable In Minutes

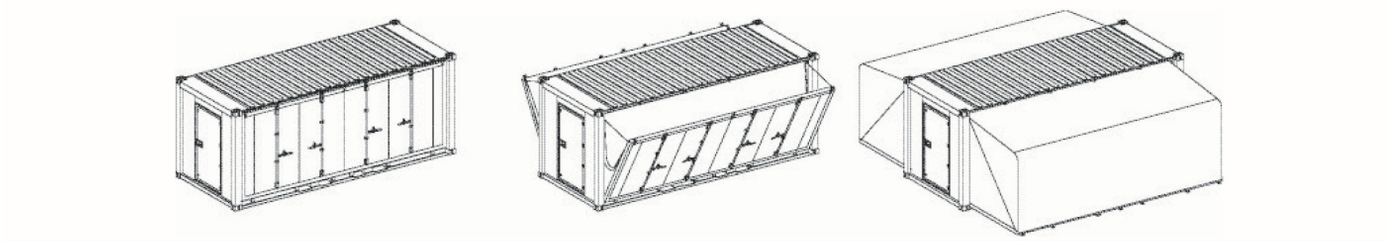

20' (6.1 m) ISO container shipping module → 400 ft² (37.16 m²) site module

User Benefits

- Cost savings through transportation economies since transport ready MECC™ is the footprint of the deployed oor space
- Unit can be well secured for transit, thereby reducing pilferage
- Cost/time savings in site setup due to rapid deployment
- Reduce future capital investment due to ease of redeployment on other missions
- Can be complexed and interconnected so end users do not have to go outside in environmentally harsh conditions
- Can be stacked on tight sites for storage or use, providing the required space in a fraction of the time it would take for conventional construction
- Expanded without exposing internal components to weather
- Maintenance is minimal

The Core

Thee MECC™ is designed to incorporate all of the standard ISO container features including forklift pockets and ISO corners, which permit its versatile handling and movement. The MECC™ core and wings are fully insulated for arctic/desert conditions.

The Wings

Cover

Expandable fabric covers are manufactured from technologically advanced vinyls, which exhibit high-tear strength, re retardance, resistance to mildew and ultraviolet radiation. The cover material performance is optimized in ambient conditions from -55° C to +65° C (-67° F to +149° F).

Frame

- Cover is tensioned into place by tubular coated steel arches that provide excellent performance in high wind or snow loading conditions
- Tools are not required for assembly of system

Options

MECC™ Core

- Mechanical room for isolation of noisy, fumeproducing or external operating equipment
- Furnishings
- Permanently mounted equipment
- Solid partitions and access doors
- Storage systems and racks
- CARC paint
- Entries
- Blackout entry vestibule
- Additional durable and weatherproof personnel doors
- Double door(s)
- Complexing options for interconnectors

MECC™ Wings

- Fabric partitions
- Infrared reective/CARC fabric upgrade
- Pivoting hard walls

Entries

- Insect netting
- Military spec heavy-duty industrial zipper
- Double zipper roll up door with Velcro seal
- MECC™ to MECC™ complexing kits
- MECC™ to other shelter/vehicle complexing

Windows

- Rigid vinyl-framed sliding windows glazed with safety glass
- Blackout option available

Floor Coverings

- Chequer plate steel or aluminium oors
- Non-slip PVC oor covering
- Medical ooring

Miscellaneous

- Mechanical jacks for levelling
- Stands for side support
- Stacking kits including ISO corner twist locks and side support extensions
- Stairs for access to mobilizer, trailer or stacked units
- Safety-tread ramps, cargo ramps
- Solar shade

The MECC™ can be tailored to meet your needs. Some arrangements include emergency response, search and rescue, HAZMAT response, kitchens, medical facilities, shower complexes, laundry facilities, command centres, dining rooms, bedrooms, wash houses and special purpose workshops such as tyre maintenance or electronic repair facilities.
Units can be custom tted with equipment and systems to suit your requirements. Some examples include:

- Functional and aesthetic interior nishes
- Heating, ventilating and air conditioning
- Complete electrical/communication/ computer cabling packages
- Complete plumbing and mechanical systems
- Sewage treatment
- Water storage and treatment
- Prime and standby power generation

10' MECC

- 10' MECC™ conguration also available



Building on the success of the MECC™, the Extended Height Mobile Expandable Container Conguration (EHMECC™) introduces a new dimension to the ISO container based capability.
The EHMECC™ system is a fully assembled and selfcontained unit that offers end users all the benet of our standard MECC™ but with the ability to raise the roof a further 4 ft, providing unparalleled interior volume and space. Deployment of this unit takes just a few minutes longer than the MECC™ , ensuring that one of the key elding aspects of MECC™ capability is maintained. No special skills are required for deployment.
Transportation logistics for the EHMECC™ could not be easier since its stowed prole follows the precise form of the universal ISO shipping container with CSC certication for air, land or sea transport and stacking. The EHMECC™ can be loaded in many ways including forklift, crane and DROPS and transported by truck, trailer, rail, helicopter, aircraft or ship. Its rugged construction and heavy-duty latching and locking mechanisms make it resistant to both pilferage and cargo damage.

Specifications

Weatherhaven Global Solutions' mission is to provide its customers with capability. The EHMECC™ can be fully customized to the client's needs. However, a standard specication could include:

- Steel or aluminium construction.
- Rugged steel or aluminium exterior.
- Weather resistant personnel doors.
- Anti-racking container locks.
- Foam insulation in walls, oors and ceiling.
- Fully insulated and rugged fabric structure in EHMECC™ wings.
- Non-slip ooring.
- Full safety equipment.

- Deployed in minutes.
- 12 ft of vertical space once deployed gives an unrivalled spacious interior suitable for many applications where standard 3-in-1 container solutions would be inadequate.
- Deployed oor area is 3 times larger than closed transport area.
- Designed to International Standards Organization (ISO) specications with CSC certication for air, land or sea transport.
- CSC certication for air, land or sea transport and stacking.
- Insulated outer shell capable of many window and door congurations.
- Fully tted out with electrical, mechanical, ECU & furnishings.



EHMECC™ Operations Centre interior.

Deployable In Minutes







20' (6.1 m) ISO container shipping module → 400 ft² (37.16 m²) site module

User Benefits

- Cost savings through transportation economies as transport ready EHMECC™ is the footprint of the deployed floor space.
- Deployed without exposing internal components to external environment.
- Unit can be well secured for transit, minimizing the possibility of pilfering.
- Cost/time savings in site setup due to rapid deployment.
- Reduce future capital investment due to ease of redeployment.
- Can be complexed and interconnected so end users do not have to go outside in environmentally harsh conditions.
- Can be stacked on sites where space is at a premium.
- Minimal maintenance required.

EHMECC™ Core

The EHMECC™ is designed to incorporate all of the standard ISO container features including forklift pockets and ISO corners, which permit its versatile handling and movement. The EHMECC™ core and wings are fully insulated for arctic/desert conditions.

EHMECC™ Wings

Expandable fabric covers are manufactured from technologically advanced vinyls, which exhibit high-tear strength, fire retardance, resistance to mildew and ultraviolet radiation. The cover material performance is optimized in ambient conditions from -55° C to +65° C. The covers are tensioned into place by coated tubular steel arches that provide excellent performance in high wind or snow loading conditions. No tools are required for its assembly - the EHMECC™ is an entirely self-sucient capability.

Options

EHMECC™ Core

- Integral isolated mechanical room for housing generator set to provide power for lighting and environmental control units.
- Furnishings.
- Permanently mounted equipment.
- Solid partitions and access doors.
- Storage systems and racks.
- Specialist cabling requirements, including bre optics, integrated into core and wings.

EHMECC™ Wings

- Fabric partitions.
- Fabric upgrades.
- Pivoting hard walls.

Entries

- Insect netting.
- Military specication heavy-duty zips.
- Double zipped roll up door with Velcro® seal.
- EHMECC™ complexing kits for multiple interconnections.

Windows

- Rigid vinyl-framed sliding windows glazed with safety glass.
- Blackout option available.

Floor Coverings

- Checker plate steel or aluminium oors.
- Non-slip PVC oor covering.
- Medical ooring.

Miscellaneous

- Mechanical jacks for levelling.
- Wing jacks for side support.
- Stacking kits including ISO corner twist locks and side support extensions.
- Stairs for access to mobilizer, trailer or stacked units.
- Safety-tread ramps, cargo ramps.
- Solar shade.

The EHMECC™ is designed, manufactured and tted out to the client's precis requirements. Applications have included emergency response, search and rescue, HAZMAT response, kitchens, medical facilities, shower complexes, laundry facilities, command centres, dining areas, bedrooms, wash houses and specialized workshops.

Systems and equipment specications have included:

- Heating, ventilating and air conditioning.
- Integrated electrical, communication & computer cabling packages.
- Integrated plumbing and mechanical systems.
- Emergency triage and clinic facilities.

Weatherhaven Global Solutions aim to resolve your demanding requirements to any contingency with a rapid and redeployable capability that meets your exact specications.

Maximum capability, minimal logistical footprint.

Weatherhaven provides enhanced and sophisticated Aircraft Support for a range of fixed and rotary wing aircraft platforms keeping logistical footprint to a minimum; with their compact packed volume, they are all C-130 air transportable and give numerous options for the establishment of a swift air support base. the

Capacity

- Secure & compact transport of shelters in 20 ft ISO containers.
- 8 ft high transit footprint gives optimal logistical options including C-130, road, rail & sea.
- Lightweight aluminium & steel or airbeam structures.
- Compatible connections to enable complexing of extended aircraft maintenance & shelter capability.
- Swift deployment within 2 hours for airbeam structures & within 12 hours for framed structures.
- No extra tools required for installation or redeployment.
- Minimal maintenance facilitates through life support.
- Fully insulated structures.
- Optional integrated ECU systems.



Construction site of a range of framed structures, providing support for fixed & rotary wing aircraft



A new range of inflatable airbeam shelter offer rapidly redeployable aircraftsupport capability; shelter can be securely and permanently installed within 2 hours. Manufactured from tough UV stable materials the range offers versatile and agilecapability.



The Irish Air Corps' Air Ambulance rotary wing shelter deployed.

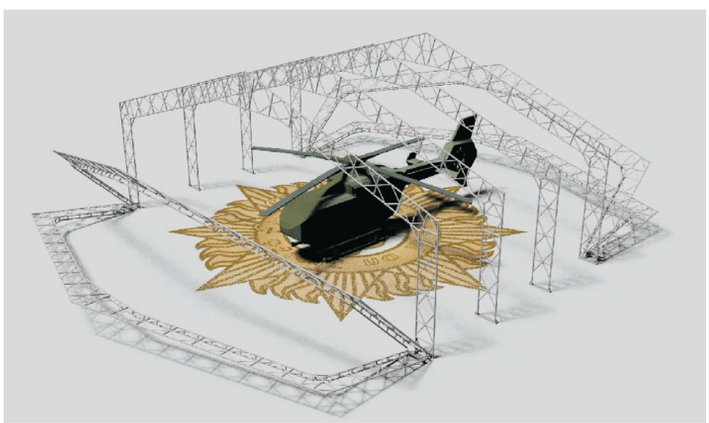

Design concept drawing for the Irish Air Corps' Air Ambulance rotary wing shelter frame.

From requirement to capability the complete solution.



Two 100 ft long Extended Height Series 4 shelters deployed in Afghanistan; these shelters can be complexed and extended to any lenght to provide swift aircraft support capability; optional self-powered independent air conditioning units enhance this capability.

RESPECTABLE HISTORY



First Balkan War, Macedonia Front (Ottoman Mobile Field Kitchen)



First World War, Balkan Front (Ottoman Field Kitchen)



First World War, Arabia Front (Ottoman Mobile Field Kitchen)



First World War, Caucaus Front (Ottoman Field Kitchen)



First World War, Arabia Front (Ottoman Mobile Field Kitchen)



First World War, Arabia Front (Ottoman Food Distribution)



First World War, Arabia Front (Ottoman Food Distribution)



First World War, Arabia Front (Ottoman Units Sharing the Meal)



First World War, Arabia Front (Ottoman Mobile Field Bakeryies)



First World War, Arabia Front (Ottoman Water Supply Point)



First World War, Arabia Front (Ottoman Field Hospital)



First World War, Arabia Front (Ottoman First Aid Point)